Honeywell

VoiceConsole

On Prem Deployment 6.6

Implementation Guide

Disclaimer

WARNING
Honeywell International, Inc. ("HII") reserves the right to make changes in specifications and other information contained in this document without prior notice, and the reader should in all cases consult HII to determine whether any such changes have been made. HII makes no representation or warranties regarding the information provided in this publication.

CAUTION
HII shall not be liable for technical or editorial errors or omissions contained herein; nor for incidental or consequential damages resulting from the furnishing, performance, or use of this material.

This document contains proprietary information that is protected by copyright. All rights are reserved. No part of this document may be photocopied, reproduced, or translated into another language without the prior written consent of HII.

©2026 Honeywell International, Inc. All rights reserved.

Google, Android, Chrome, and other marks are trademarks of Google LLC.

Microsoft, Microsoft Edge, Windows, and the Windows logo are registered trademarks or trademarks of Microsoft Corporation in the United States and/or other countries.

The Bluetooth word mark and logos are owned by the Bluetooth SIG, Inc.

Apple, iPad, and iPhone are trademarks of Apple Inc., registered in the U.S. and other countries and regions. IOS is a trademark or registered trademark of Cisco in the U.S. and other countries and is used under license.

Other product names or marks mentioned in this document may be trademarks or registered trademarks of other companies and are the property of their respective owners.

Web Address: automation.honeywell.com

Patents

For patent information, please refer to hsmpats.com

TABLE OF CONTENTS

Chapter 1 - Introduction 1

Customer Support 1

Chapter 2 - VoiceConsole System Requirements 3

Server Requirements 3

Supported Languages 7

Network Bandwidth Requirements 8

Minimum Per Device Bandwidth Requirements 9

Network Bandwidth Calculations 11

Client Requirements 11

Configure the Browser 12

Supported Voice Devices 13

Supported Talkman Devices 13

VoiceConsole Android Support 14

Chapter 3 - Plan Your VoiceConsole Installation 15

Single Site or Multiple Site Architecture Mode 15

Linux Installation 17

Manage Multiple Sites 18

What You Need 19

Clustered and Load Balanced Environments 19

What You Need 23

Banner Page 23

Security Options 24

Site Based 26
Device Based 26
Operator Based 26
SAML SSO Configuration 27
Enable SAML SSO During Installation 28
Configure SAML 28
Cloud Hosting 30
Set up the Cloud Environment 30
Chapter 4 - VoiceConsole Database 33
New Installation 34
Upgrade Installation 34
Oracle Database 21c Express Edition 34
Microsoft SQL Server 2019 or 2022 Express 36
Back Up and Restore the VoiceConsole Database 39
Oracle 19c and 18c Enterprise 39
How to Create a Backup of the VoiceConsole Database for VoiceConsole On Prem Deployment 39
SQL Server 42
How to Create a Backup of the VoiceConsole Database 43
How to Schedule a Backup of the VoiceConsole Database 43
How to Restore the VoiceConsole Database 44
Chapter 6 - Install VoiceConsole for the First Time 47
Install the USB Driver 60
Install the USB Driver on Windows 60
Initial Setup 60
Secure the Database Password 61
Perform a Silent Installation 62
Configuration Fields for Silent Installation 66

Chapter 7 - Upgrading VoiceConsole 79
Understanding VoiceConsole Versions 79
Prepare to Upgrade 79
Default Ports 80
Data Agent 80
Upgrade VoiceConsole On Prem Deployment 81
Upgrade from an Existing Installation on a Different Computer 86
Migrate the Devices to the New Computer 91
Upgrade in a Clustered Environment 91
Migrate from One Database to Another 92
Perform a Silent Upgrade 93
Configuration Fields for Silent Upgrade 98
Chapter 8 - VoiceConsole Licensing 111
License Term 111
License Delivery 111
License Architecture 112
Configure License 114
Local Licensing 114
Local Licensing Process 115
Legacy Licensing 115
Legacy Licensing Limitations 116
License Management 116
Licensing Option Feature Availability 116
Comparison of Licensing Modes 116
Check Your Mode 117
Upgrade Your License 118
Activate License 118
Create License Request File 118

Process License Request File 119
Import License Response File 120
Deactivate License (Full) 120
Create License Request File 120
Process License Request File 121
Import License Response File 121
Release Licenses within Honeywell Software Licensing Portal 122
Partial Return of Licenses 122
Deactivate License (Partial) 123
Create License Request File 123
Process License Request File 124
Import License Response File 124
Release Licenses within Honeywell Software Licensing Portal 125
Partial Return of Licenses 125
Import License 126
Apply License 127
Delete License 127
View License 128
View Agreement 130
Chapter 9 - Configure Security 131
Create and Install a Certificate for HTTPS 131
Create a Certificate Signing Request 131
Get a Certificate from a Certificate Authority 132
Install the Certificate 137
Configure VoiceConsole 138
Configure EAP for the Site 140
Configure the Device Profiles with EAP 142
View Trusted Certificates 142
Trusted Certificate Authorities 143

Add New Trusted Certificate Authorities 143
Secure Device Communications 144
Chapter 10 - Configure VoiceConsole Logs 147
Device Logs 149
Enable and Disable Device Logging 150
View Device Logs 153
Delete Device Logs 155
Clear Device Logs 155
Download Device Logs 156
Voice Log Analyzer 156
Chapter 11 - Increase VoiceConsole Memory Manually 157
Increase Memory in Windows 157
Increase Memory in Linux/Unix 157
Chapter 12 - Data Protection 159
Backing Up and Restoring the Database 159
Application Redundancy 159
If a VoiceConsole On Prem Deployment Becomes Unresponsive or Shuts Down Suddenly 160
Windows 160
Red Hat Linux, SUSE Linux, and CentOS Linux 160
Chapter 13 - Uninstall VoiceConsole On Prem Deployment 161
Appendix A - VoiceConsole On Prem Deployment Implementation Checklist 163
Appendix B - VoiceConsole Database Migrator 169
Appendix C - Set Up RapidStart 173

Appendix D - Multi-Server / Multi-Site VoiceConsole and VoiceLink Implementation 175

Time Zone Considerations 175

Working with Tasks in Multi-Site Implementations 175

Creating Additional Sites in VoiceConsole On Prem Deployments for Multiple Site Implementations 177

Migrate Operators from an Existing VoiceConsole Database 180

Import a Task to the New Site 181

Creating Additional Sites in VoiceLink for Multiple Site Implementations 181

Appendix E - Multi-Server / Multi-Site VoiceConsole and VoiceCheck Implementation 185

Time Zone Considerations 185

Working with Tasks in Multi-Site Implementations 185

Creating Additional Sites in VoiceConsole On Prem Deployments for Multiple Site Implementations 186

Creating Additional Sites in VoiceCheck for Multiple Site Implementations 189

Appendix F - VoiceConsole Version History 191

CHAPTER

1

INTRODUCTION

IMPORTANT
This guide is designed for VoiceConsole On Prem deployments. Additional information is available online at www.help.honeywellaidc.com.The online help also contains information for about VoiceConsole SaaS deployments.

The VoiceConsole Implementation Guide is intended for Honeywell personnel and certified partners who are assumed to have a working knowledge of:

- Function and use of voice system management software
- Operating systems
- Wireless networking hardware and architecture
- Relational database structure and administration
- Extensible Authentication Protocol (EAP) based security

The instructions throughout this guide assume the VoiceConsole

For VoiceConsole On Prem deployment the Implementation Checklist is included in Appendix A.

Customer Support

Find most Honeywell Voice technical documentation at www.help.honeywellaidc.com

Honeywell Voice Reseller Services

If you purchased equipment or services through a Honeywell Voice reseller, please contact your reseller first for support or to purchase a support plan.

Honeywell Voice Technical Support

To report Voice system support incidents or related technical issues, contact the Honeywell Technical Support Center at:

Technical Support Email: voicetechnicalsupport@honeywell.com
Technical Support Phone (US): +1 866 862 7877
Technical Support Phone (Rest of the World): +1 412 376 9384
Technical Support Phone (EMEA): +44 (0) 1344 65 6123

For assistance on all other matters, contact your Honeywell Certified Reseller or Honeywell directly at automation.honeywell.com

CHAPTER 2

VOICECONSOLE SYSTEM REQUIREMENTS

Review the following requirements for VoiceConsole:

- Server Requirements: Requirements for the server running a VoiceConsole On Prem deployment
- Language Support: Languages supported in the VoiceConsole interface
- Network Bandwidth: Bandwidth necessary to support VoiceConsole network traffic at peak times
- Client Requirements: Requirements for a PC accessing the VoiceConsole interface
- Voice Devices: Supported Voice devices

Server Requirements

VoiceConsole On Prem Deployment

This section contains the server and client hardware, software, and bandwidth requirements for running VoiceConsole based on the number of devices that you have operating at any one time at your site.

> **NOTE**
> While it is possible to run VoiceConsole in untested configurations and environments, doing so may lead to unexpected problems. Ensure that the problem is not directly related to running on unsupported environments. Attempt to reproduce the same problem in a supported environment or configuration to see if it still occurs before contacting support.

Hardware Requirements

The requirements shown are the **minimum requirements**. For better performance, increase the amounts shown here.

Total Number Devices Being Managed	Average Operator Shift Size	Average Operator Shift Startup Time Period	CPU of Server Machine	Server Memory	Server Hard Drive
<300	<150	<3 minutes	Intel Quad Core processor	2 GB DDR	60 GB

Total Number Devices Being Managed	Average Operator Shift Size	Average Operator Shift Startup Time Period	CPU of Server Machine	Server Memory	Server Hard Drive
300 - 600	150 - 300	3 - 5 minutes	Dual Core Intel 3.0 GHz	4 GB DDR	80 GB
600 - 2500	300 - 900	5 - 15 minutes	Two machines, each Dual Core Intel 3.0 GHz	4 GB DDR each machine	120 GB each machine

NOTE

Honeywell recommends that you install two load balance application servers and a single database server.

Honeywell has tested the On Prem deployment up to 2700 devices. The solution could be used beyond this by adding more resources but limitations such as latency may result.

> **NOTE**
> If you want to install VoiceConsole for demonstration or evaluation purposes, Honeywell recommends that you use a machine that meets the following minimum specifications: Intel Pentium 4 2.6 GHz machine, 1 GB DDR of memory, and a 40 GB hard drive. Honeywell does not recommend running more than 10 devices in a demonstration or an evaluation environment.

VoiceConsole running on these hardware components produces the following average transaction times for operator loads during instances of peak load, such as shift changes.

CPU	Memory	Hard Drive	Device Con-current Loads	Avg. Trans. Time in ms
Dual Core Intel 2.0GHz	2GB DDR	40GB	300	400
Dual Core Intel 3.0GHz	4GB DDR	80GB	600	400
Two machines running with Dual Core Intel 3.0GHz each	4GB DDR each machine	120GB each machine	2500	1300

Software Requirements

The following operating systems and databases are supported with VoiceConsole 6.6.

Supported Operating Systems

Before installing VoiceConsole on a Windows server, download and install the Microsoft Visual C++ Redistributable from the Microsoft website.

- Microsoft Windows Server 2025
- Microsoft Windows Server 2022
- Microsoft Windows Server 2019
- Microsoft Windows Server 2016
- Red Hat Enterprise Linux 9
- Red Hat Enterprise Linux 8
- SUSE Linux Enterprise Server (SLES15) 64-bit
- Ubuntu 22.04
- Ubuntu 24.04

Supported Databases

Because the database installation is performed separately and is not part of the VoiceConsole installation, you can either install VoiceConsole on the same server as the database, or you can install it on a separate machine. When prompted by the installer, provide the location of the local or remote database.

- Microsoft SQL Server 2019 Express
- Microsoft SQL Server 2019 Standard
- Microsoft SQL Server 2022 Express
- Microsoft SQL Server 2022 Standard
- Microsoft SQL Server 2025 Standard
- Oracle Database 19c
- Oracle Database 21c
- Oracle Database 21c Express Edition (XE)

Notes for VoiceConsole Operating Systems and Databases

- Honeywell has only tested upgrades with supported databases. You may still upgrade from an unsupported database at your own risk. If you have questions regarding upgrading from an unsupported environment, please contact Honeywell technical support.
- VoiceConsole is certified to work with SQL Server database encryption. An automated performance test was executed on an encrypted SQL database. Encryption can be enabled through the SQL Server Database. While not tested with other database encryption vendors, it is expected to work.
- **Express databases**: Honeywell recommends the Express database options for sites with less than 300 devices.
- **Oracle**: When creating a new Oracle database, ensure that you are using the AL32UTF8 character set for non-English versions of VoiceConsole.
- **SQL**: If the SQL Server database collation is not set to be case insensitive, VoiceConsole may not work properly. When creating a new SQL Server database, ensure that you choose the proper collation for the language that the system is in with _CI included in the collation name.

Database Size

The size of your database depends on the amount of data that you have in VoiceConsole. This table lists the totals for the data elements that require database space and the estimated size your database could be based on those numbers.

License Size	Settings Translator Size	# Operators	# Operator Templates	# Task Packages	#Tasks	# Imported VoiceClients	# Device Profiles	# Devices	Estimated Minimum Database Size
4	96	100	100	2	2	2	2	20	1912 KB
4	96	50	50	2	2	3	3	30	10536 KB
4	96	100	120	2	2	2	2	20	48833 KB
4	96	200	200	4	8	3	4	50	161632 KB
4	96	200	246	5	10	3	4	50	193658 KB

The estimated minimum database size you could experience is based on the following calculation:

Estimated Size of Database (in KB) = 4 + 96 + (*Number of Operators* x 6.5) + (*Number of Operators* x *Number of Operator Templates* x 4) +*Number of Task Packages* + (*Number of Tasks* x 12.5) + (*Number of Imported VoiceClients* x 4.5) + (*Number of Device Profiles* x 3.5) + (*Number of Devices* x 2)

> **NOTE**
> Where: 4 = size of license and 96 = size of settings translators.

Supported Languages

- English (US) is the only fully supported language in the VoiceConsole interface.
- Support for the languages listed below is limited. Text for features added after VoiceConsole 5.4 may not be translated and may appear in English. The browser's translation function can be used to translate pages containing English text. Note that translation availability depends on operating system locale and browser locale settings. The browser must be able to connect to Internet resources to perform the translation.
    - Czech
    - Danish
    - Dutch
    - Finnish
    - French
    - French - Canadian
    - German
    - Greek
    - Hungarian
    - Italian
    - Japanese
    - Norwegian
    - Portuguese
    - Portuguese - Brazilian
    - Spanish
    - Spanish - Latin American
    - Swedish
    - Korean
    - Polish

- Simplified Chinese
- Russian
- Traditional Chinese

Network Bandwidth Requirements

VoiceConsole bandwidth requirements depend on the network traffic generated during peak times. Peak times for VoiceConsole are characterized by shift start-up activities, such as loading operators and Task Packages to devices.

For VoiceConsole On Prem deployment only: Depending on the network topology, a network may have a direct line from each site to the server location or a single line servicing all communications.

Direct Line for Each Site - VoiceConsole On Prem Deployment

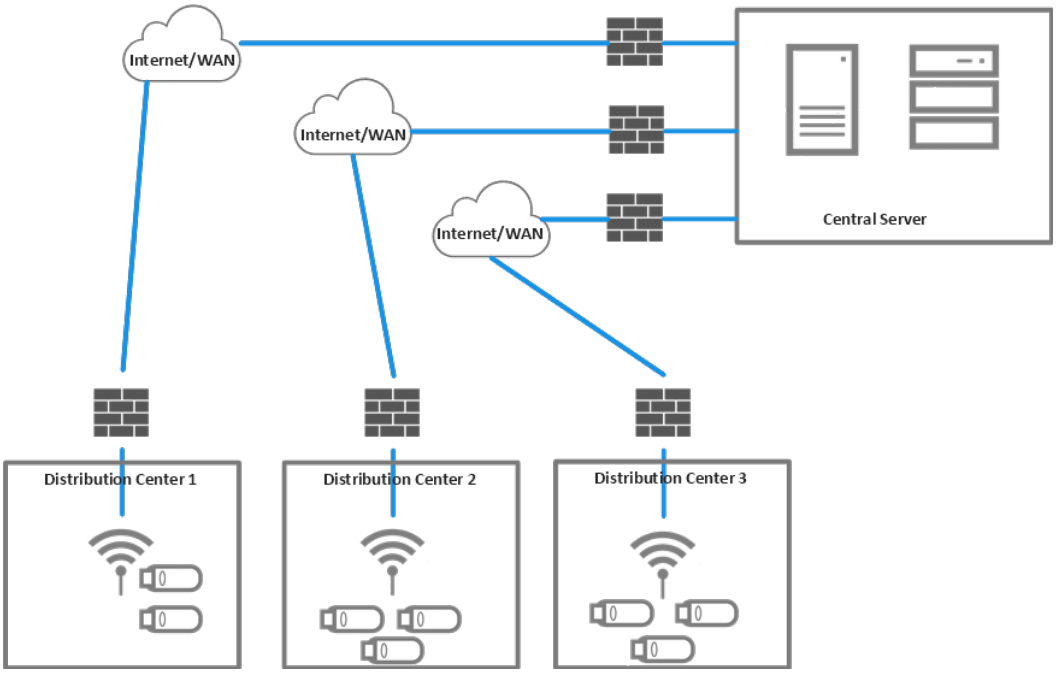

# Active Devices per Site (or shift)	Operator Load	Task Package Load	Minimum Recommended Bandwidth
10	0.2 MBps	0.2 MBps	1 MBps
50	1.03 MBps	1.28 MBps	3 MBps
100	2.06 MBps	2.56 MBps	5 MBps
200	4.12 MBps	5.12 MBps	10 MBps
300(+)	6.18 MBps	7.68 MBps	15 MBps

Single Line For All Sites - VoiceConsole On Prem Deployment

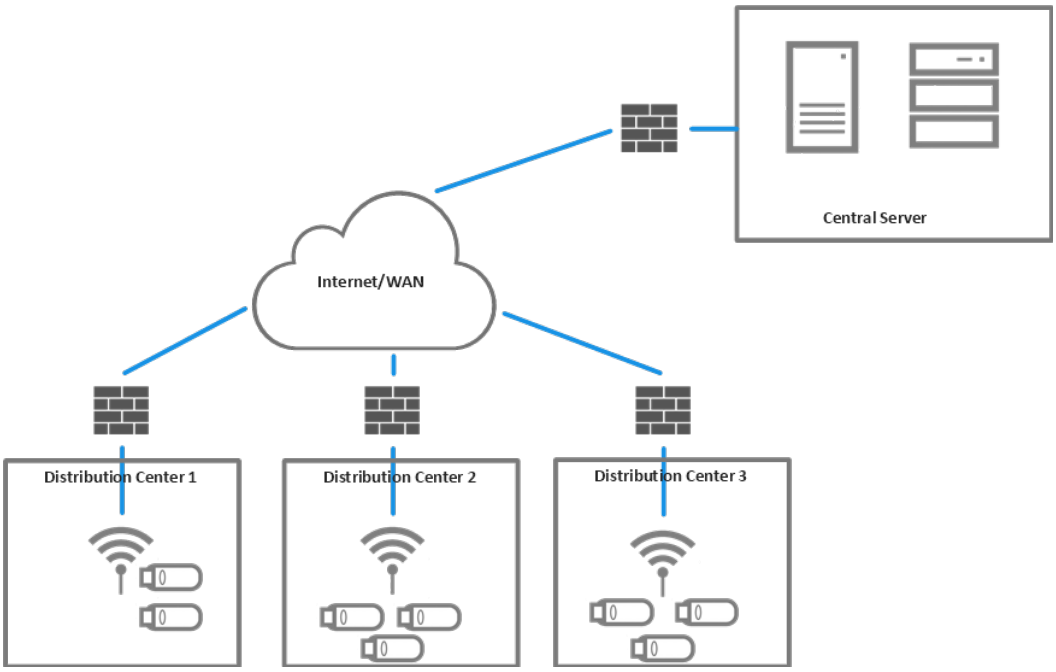

Total # of Devices Being Managed	Operator Load	Task Package Load	Minimum Recommended Bandwidth
100	0.41 MBps	0.51 MBps	1 MBps
300	1.23 MBps	1.53 MBps	3 MBps
500	2.05 MBps	2.56 MBps	5 MBps
2500	10.25 MBps	12.8 MBps	24 MBps

Minimum Per Device Bandwidth Requirements

Scenario	Device Type	Total Data Transfer	Typical Elapsed Time	Bandwidth Required
Start of Shift	Any	0.416 MBps	90 seconds	50 KBps
Profile Load for VoiceConsole	A700	48 MBps	5 minutes	160 KBps
	A700x	300 MBps		1 MBps

See minimum required site bandwidth tables below.

File transfers, such as loading a VoiceClient into VoiceConsole or loading a profile onto a device may take longer in a cloud environment than they may take in a local installation.

Minimum Recommended Bandwidth per Site (Start of Shift)

Number of Active Devices	Bandwidth (MBps)
10	1
20	3
30+	5
200	10
300	15

A700 Minimum Recommended Bandwidth per Site (Profile Load) for VoiceConsole On Prem Deployment

Number of Active Devices	Bandwidth (MBps)
10	2
20	4
30+	8

A700x Minimum Recommended Bandwidth per Site (Profile Load)

Number of Active Devices	Bandwidth (MBps)
10	10
20	20
30+	30

Network Bandwidth Calculations

Assumptions and Comments

- Application and/or operator loading is completed within a 5-minute window. This is a highly conservative assumption. In real-world conditions, operator loads are typically staggered over a longer period of time.
- The bandwidth requirements specified are based on the assumption that only 1/5 of the total number of devices in the entire system concurrently download operators within a five-minute window.
- Application loads are only required when the device application is updated. Operator loads occur at every shift change.
- The network bandwidth requirements are calculated values based on the following assumptions for typical operator and Task Package loads:
    - Typical Operator Load Transfer = 232 KB (1856 Kb) of data per device
    - Typical Task Package Load Transfer = 288 KB (2304 Kb) of data per device
- The Site Bandwidth requirements (SBWR) based on these assumptions can be determined using the following calculation:
    - SBWR Operator Load = (Devices per Site x 1856 Kb) / 300 sec
    - SBWR Application Load = (Devices per Site x 2304 Kb) / 300 sec
- The Central Site Bandwidth Requirements (CSBWR) based on these assumptions can be determined using the following calculation:
    - CSBWR Operator Load = 1/5 x SBWR Operator Load x Number of Sites
    - CSBWR Application Load = 1/5 x SBWR Application Load x Number of Sites

Client Requirements

A client machine for VoiceConsole On Prem deployment must be running a supported operating system and browser.

The following operating systems are supported for the VoiceConsole On Prem deployment client:

- Microsoft Windows 10
- Red Hat Enterprise Linux for Workstations

The following browsers are supported for the VoiceConsole On Prem deployment client:

- Microsoft Edge
- Mozilla Firefox 4.x and newer
- Google Chrome

All browsers require having Java JRE 1.8 installed and configured.

Configure the Browser

Before installation, confirm that your browser is configured properly.

Regardless of which browser you are using, you must configure your browser as follows to enable the application to work correctly and provide security:

- Browser must be set to reload the page at each visit.
- JavaScript must be enabled.
- Browser must be configured to accept cookies.
- Browser must have the maximum number of simultaneous connections set to your preference for the Device Dialog Display feature.

These browser settings are typically accessed by selecting **Tools** > **(Internet) Options**.

The following subsections cover browser configurations specific to the type of browser that you may be using.

Firefox Configuration

These changes are only required when viewing VoiceConsole On Prem deployment in Firefox.

Before you can use certain features in the Firefox browser, you must make the following configuration changes:

1. In your browser's address bar, type: **about:config**
   The browser then displays a list of properties.
2. Type **signed** in the filter box, just above the list of properties.
3. Find the entry named **signed.applets.codebase_principal_support** in the property list, and double-click the entry to change the value from false to true. This change enables you to copy records from VoiceConsole On Prem deployment tables to the Windows clipboard.
4. Click **OK**.
5. Type **browser.link** in the filter box, just above the list of properties.
6. Find the entry named **browser.link.open_newwindow** in the property list, and double-click the entry. Change the value to **2**. This change enables context-sensitive help links to open in a new browser window.
7. Restart the browser.

In addition to the previous process, do the following to verify that your browser is configured to open new pages in a new window:

1. Select **Tools** > **Options**.
2. Click **Tabs**.
3. For the parameter, **New pages should be opened in**, click the option to open new pages in a new window.
4. Click **OK**.

Configure Firefox for the Device Dialog Display Feature

To fully use the Device Dialog Display feature, Honeywell recommends configuring Firefox to modify the limit of simultaneous connections.

To do this:

1. In your browser's address bar, type: `about:config`
   The browser then displays a list of properties.
2. Type `max-con` in the filter box, just above the list of properties.
3. Find the entry named **network.http.max-connections-per-server** in the property list, and double-click the entry.
4. Change the value to the maximum number of simultaneous connections that you want.
5. Click **OK**.
6. Type `max-per` in the filter box, just above the list of properties.
7. Find the entry named **network.http.max-persistent-connections-per-server** in the property list, and double-click the entry.
8. Change the value to the maximum number of simultaneous connections that you want.
9. Click **OK**.
10. Restart the browser.

Supported Voice Devices

Refer to Server Requirements for a SaaS deployment for limitations on the number of devices supported per VoiceConsole instance.

Supported Talkman Devices

The following voice devices are supported:

- A700XP
- A700x
- A700
- A500

> **IMPORTANT**
> Devices such as the Talkman T5 or older may function, but are not tested with current software and are therefore unsupported. For these devices, Honeywell Technical Support considers any issues encountered and reported under "best effort" support.

VoiceConsole Android Support

DevKit based applications are built from DevKit and may be referred to as DevKit based or branded for a specific solution such as Guided Work Solutions (GWS) or a Warehouse Management System (WMS). These applications run on A700x, A700XP, and Android devices.

- Applications must be built from DevKit 1.15 or later. DevKit 2.1 or later is recommended.

> **NOTE**
> Android devices are not supported in DWS Mode.

Refer to VoiceConsole online help for a comparison of featured between Talkman and Android devices.

For more information see the list of Guided Work Solutions Supported Devices.

CHAPTER 3

PLAN YOUR VOICECONSOLE INSTALLATION

> **NOTE**
> This section of online help applies only to VoiceConsole On Prem deployment customers.

> **NOTE**
> VoiceConsole On Prem deployment is designed to integrate with and support various IT infrastructures, databases, and operating systems. This section is designed to help you to understand the various implementation options available with VoiceConsole On Prem deployment and the best practices in planning an implementation.

Depending on your system configuration, the hardware and software requirements may vary.

Single Site or Multiple Site Architecture Mode

VoiceConsole On Prem deployment installation offers two architecture modes:

- Single-site mode, where a separate instance of VoiceConsole On Prem deployment is installed at each voice-enabled site.
- Multi-site mode, where a single instance of VoiceConsole On Prem deployment is used to manage the voice system components at multiple sites.

Decentralized Architecture (Single-Site Mode)

A distribution center with multiple sites may want to use a single-site implementation, installing a VoiceConsole On Prem deployment server at each site where voice is supported.

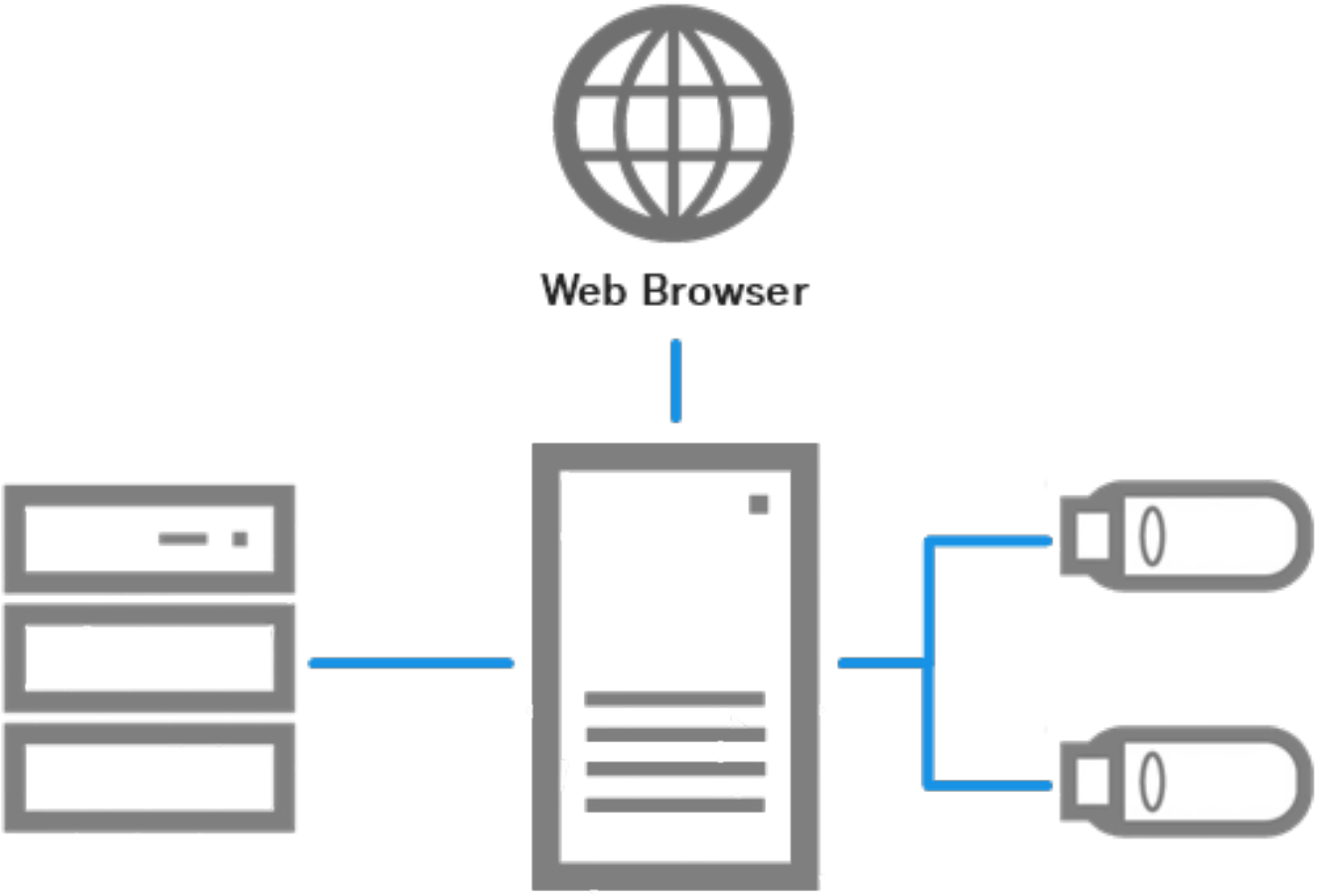

Centralized Architecture (Multi-Site Mode)

VoiceConsole On Prem deployment can also be implemented in a centralized architecture, or multi-site mode, where one instance of VoiceConsole On Prem deployment is used to manage the voice system components at multiple sites. In this scenario, the database and application are installed at a single site, and that installation is used to manage one or more remote sites. See Manage Multiple Sites for more information on the benefits and limitations of this configuration.

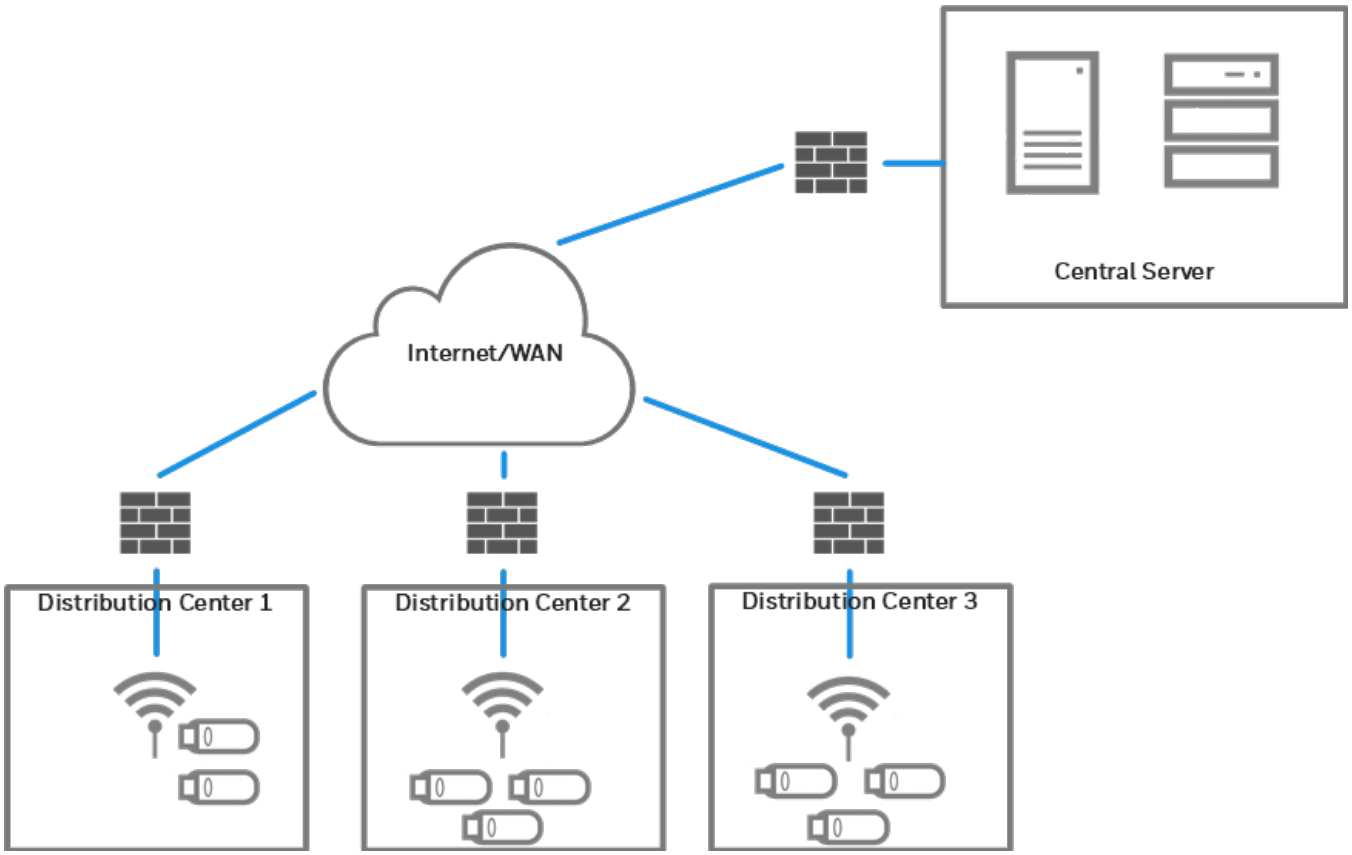

Single-Server Implementations with VoiceConsole On Prem Deployment and VoiceLink

> **NOTE**
> When installing this version of VoiceConsole On Prem deployment along with VoiceLink 3.0 or newer, use a different database for VoiceConsole On Prem deployment than what you are using for VoiceLink. Refer to the VoiceLink Implementation Guide for VoiceLink system requirements.

VoiceLink and VoiceConsole On Prem deployment can be installed on the same server, in any order, but cannot share the same database. However, the database information for the first application installed can often make it easier to install the second application.

The two applications do require separate installations of Apache Tomcat and must be configured to use separate TCP/IP communication ports to avoid port conflicts. Honeywell recommends that the first installed application be running when the second is installed so that ports in use can be detected.

Linux Installation

By default, when installing with Linux the installer must be run as root.

Manage Multiple Sites

This section contains an overview of multi-site management within a VoiceConsole On Prem deployment, its benefits, and its limitations.

For VoiceConsole On Prem deployment, one default site named **Default** exists in the system. You can create named sites and assign various other data elements to those sites as well as import software across multiple sites.

> NOTE
> While this feature is primarily used for different physical locations, you can define a site as anything that you want to segregate. For example, you can define sites as different operational areas within a site or you can set up separate test and production sites.

Benefits of Multi-Site Management

Centralized Management

A VoiceConsole On Prem deployment does not need to be implemented separately at each site or distribution center.

Site-Segregated View

A user with the proper privileges can easily switch between one site's data and another site's data.

Secure Access

Only users with the proper privileges can view and manage multiple sites.

Importing Software Components Across Multiple Sites

A user can select one or more sites when importing VoiceConsole software and VoiceApps (tasks) into the system, giving consistency throughout the company.

Device Management

Device profiles are linked to a site, which in turn is linked to a time zone. When a device profile is loaded to a device, the device is automatically assigned to the proper site and time zone.

Limitations of Multi-Site Management

Network Requirements

Because the network must handle a larger number of parallel operator loads during the start of a shift, a centralized VoiceConsole On Prem deployment installation requires an appropriate amount of network bandwidth between each site being managed and the server. See Network Bandwidth Requirements for information.

Viewing Multiple Sites Within a Single VoiceConsole On Prem Deployment Session

You can switch between different sites within a VoiceConsole On Prem deployment, but there is currently no way to view or manage multiple sites within a single browser session. However, the **Home** page in the application displays a **Site Summary** that provides a summary of the sites in the system.

What You Need

If a VoiceConsole On Prem deployment is installed into a multi-site environment, you need the following information:

- Total number of sites
- Total number of devices
- Number of devices per site
- Shift size
- Shift startup times per site

Clustered and Load Balanced Environments

> IMPORTANT
> Contact Customer Support for licensing assistance when installing in a clustered environment.

> NOTE
> A best practice is to restart the application from time to time, especially in large clustered deployments, to prevent out of memory errors.

VoiceConsole On Prem deployment can be installed on servers that are grouped for load balancing or failover. Failover systems provide a fully redundant instance of each node, which is only brought online when its associated primary node fails. In Load Balancing systems, when a node fails, traffic intended for that node is either passed onto an existing node or load balanced across the remaining nodes.

> IMPORTANT
> In load balanced environments, it is important to configure both session affinity and IP affinity. Both session affinity and IP affinity are configured in the load balancer.
>
> Session affinity allows devises with a browser connection (such as workstation clients and other devices that use cookies) to maintain connections when passing through the load balancer.
>
> Honeywell Voice devices require IP affinity to maintain connections when passing through the load balancer.

The Honeywell Voice devices can be individually configured to use IP affinity or all devices on the Honeywell Voice network can be configured for IP affinity.

NOTE
These are simple examples; they may not correspond exactly to your configuration.

Single Database with Clustered Application Servers

VoiceConsole On Prem deployment is installed on multiple nodes of a clustered application server that communicates with a single instance of a database. All VoiceConsole On Prem deployment clients communicate through a dispatcher.

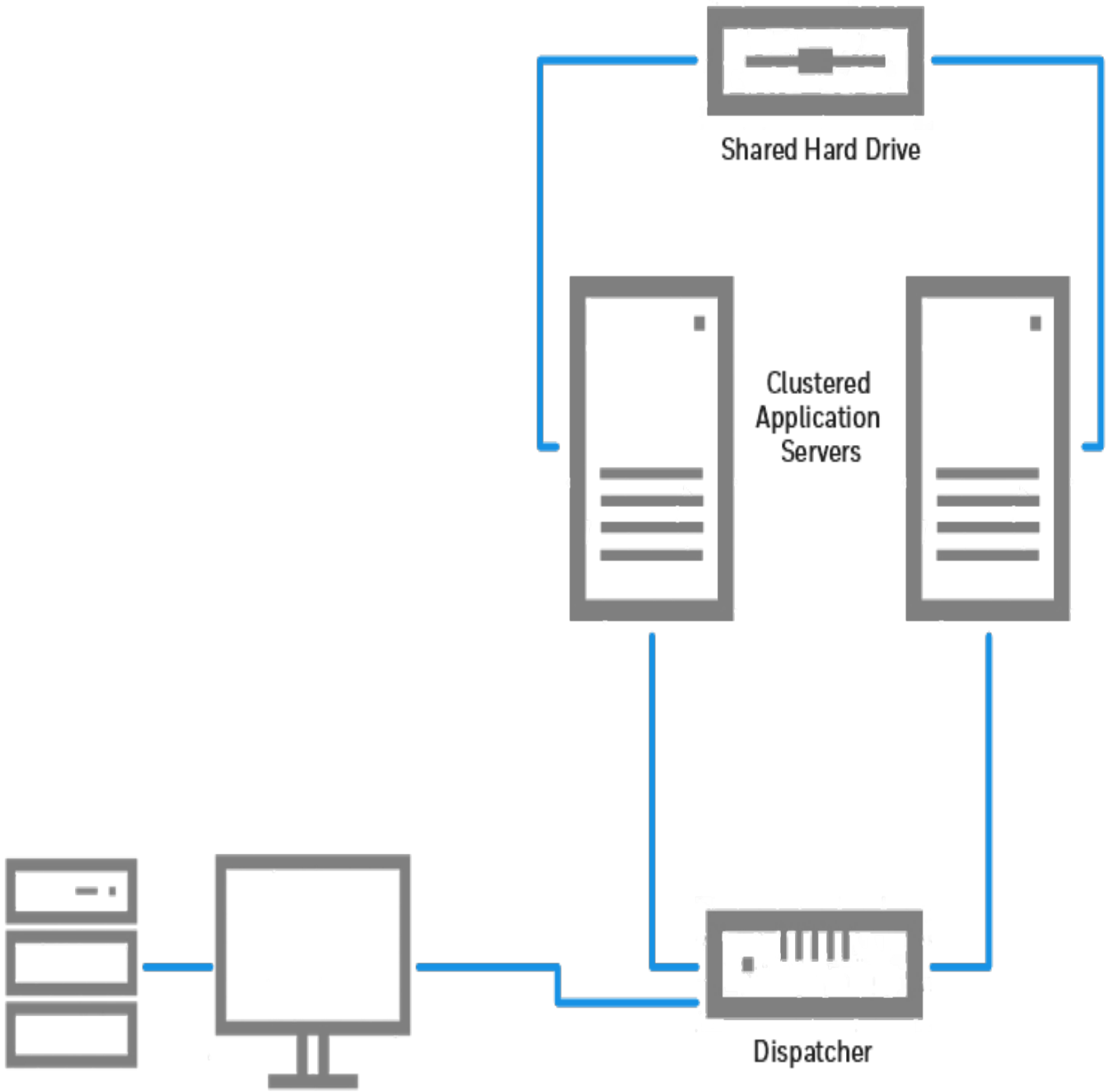

Single Application Server with Clustered Database

VoiceConsole On Prem deployment is installed on a single application server. It communicates with a database that has multiple nodes acting as a single interface for a common underlying database.

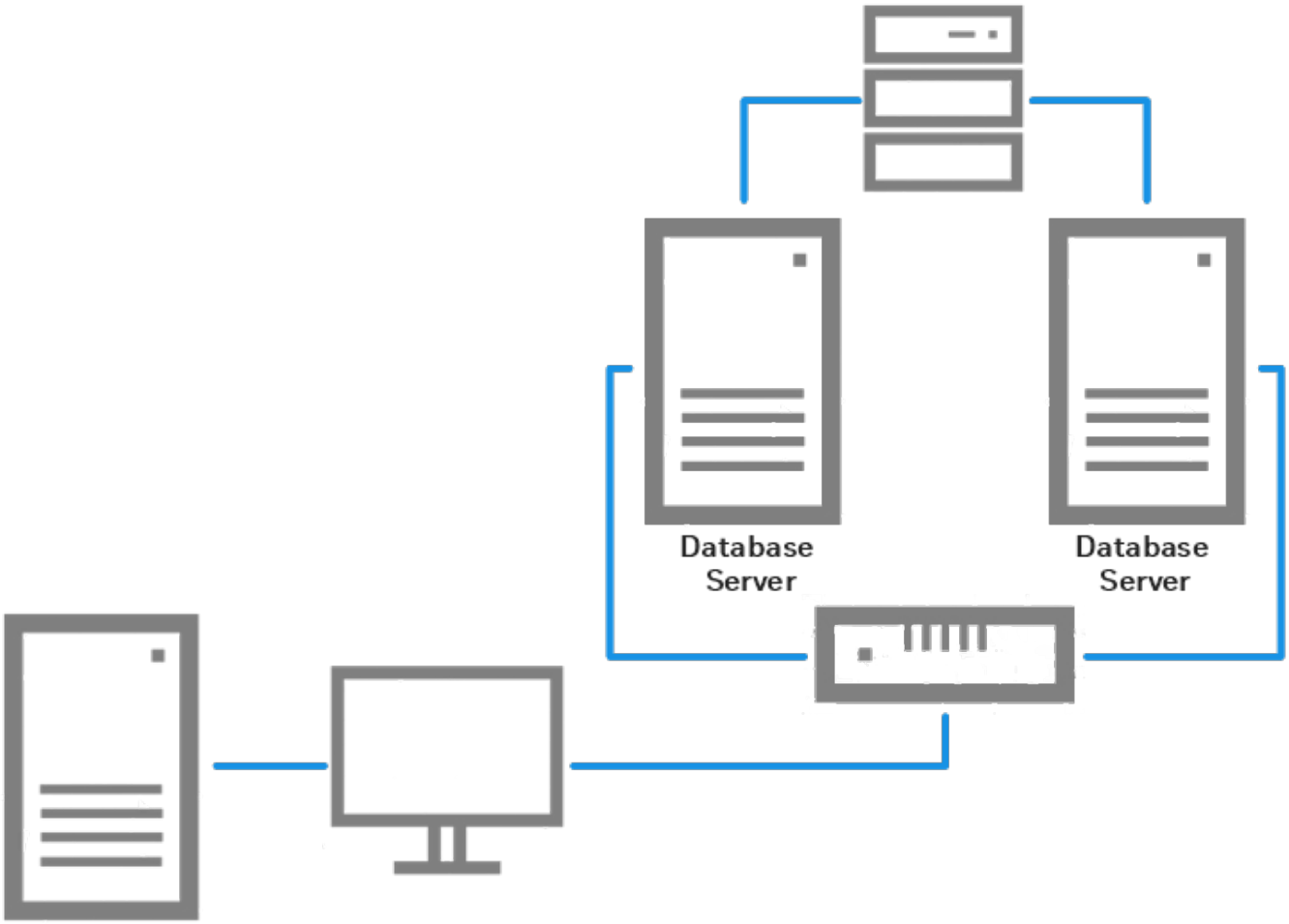

Clustered Database and Application Servers

This configuration is a combination of the two scenarios described above.

In this scenario, there are no single points of failure because both the application servers and the databases have some form of redundant response mechanism.

Benefits of Clustering/Load Balancing

Increase Performance

Performance can be increased if the system is going to be under heavy stress.

Facilitate Scaling

Depending on implementation, VoiceConsole On Prem deployment could grow by adding cluster nodes without drastic changes to implementation architecture.

Fault Tolerant

Depending on implementation, VoiceConsole On Prem deployment can continue to operate after an application server and/or database failure.

Limitations of Clustering/Load Balancing

Visible Failed Node Symptoms

If using the VoiceConsole On Prem deployment user interface when a node fails, you may have to log in again or repeat some actions.

Risk of Network Bottlenecks

Potential network bottlenecks based on network infrastructure between load balancer, VoiceConsole On Prem deployment servers, and database servers. Implementing database clustering supported by database vendor may be necessary.

Visible Failover Symptoms

If using the VoiceConsole On Prem deployment user interface while a failover occurs, you may have to log in again or repeat some actions. Devices may report some errors and have to resend data if performing actions during a failover. If database failover is desired, the customer must implement it as recommended by the database vendor.

What You Need

If VoiceConsole On Prem deployment is being installed into a clustered environment, you need the following information.

- The logical hostname of the application server and/or database server cluster.
- The shared location of the device log and firmware files.

Banner Page

An optional banner page is now available. This banner page displays before the login page. It includes a button that must be clicked before the user can continue to the login page.

The database setting DISPLAY_BANNER_PAGE controls banner page display. Values are "yes" (display banner page) or "no" (do not display banner page).

A placeholder HTML banner page is included and must be customized. Create text content for the banner wording and insert it into the following section in {tomcat-home}/webapps/VoiceConsole/WEBINF/classes/page/banner.ftl. Edit the <td></td> line shown below and add additional <td></td> lines, if needed.

```
<div class="formdata">
```

```
  <table id="banner">
    <tr><th>${title}</th></tr>
     <tr>
      <td>This is the Banner Page.
        <br>Please update as you see fit.</td>
    </tr>
  </table>
</div>
```

Update the database, and set voc_system_properties.DISPLAY_BANNER_PAGE "yes".

Security Options

A VoiceConsole On Prem deployment provides support for several authentication and encryption methods.

- To keep networks secure, Honeywell recommends authentication combined with a protocol that supports authentication methods.
- *Authentication* is simply verifying that the user who is attempting to contact the network is the actual user. Server certificates provide verification that the user is connecting to the proper network.
- *Encryption* is a way of changing data into a secret code. The recipient of the data requires a pre-supplied key to decode it.
- To secure web server communications, VoiceConsole On Prem deployment supports HTTPS. To secure the device connectivity on a wireless network, VoiceConsole On Prem deployment uses Extensible Authentication Protocol (EAP). This section provides a brief description of these options. See Configure Security for setup information.
- You can set up the following types of authentication and encryption in device profiles:
    - WEP: Wired Equivalent Privacy (not available for A700XP)
    - WPA PSK, WPA2 PSK: Wi-Fi Protected Access with a Pre-Shared Key
    - WPA3 PSK/SAE: Wi-Fi Protected Access with Pre-Shared Key and Simultaneous Authentication of Equals (only available for A700XP)
    - WPA3 OWE: Wi-Fi Protected Access with Opportunistic Wireless Encryption (only available for A700XP)

Hypertext Transfer Protocol Secure (HTTPS)

HTTPS is a networking protocol that secures web- or browser-based transactions over a network that is not secure. All HTTPS user connections are encrypted with digital certificates that tell the browser to use encryption to protect data transmissions.

For VoiceConsole On Prem deployment, this protection is effective only if the browser verifies a certificate as valid and issued by a trusted authority. Therefore, you must ensure that the server certificate is installed correctly and the browser used for VoiceConsole On Prem deployment administration is configured to accept the certificate.

What You Need for VoiceConsole On Prem deployment

If you are configuring VoiceConsole On Prem deployment for HTTPS, you need:

- Java keytool utility to create a certificate request
- A signed certificate

See Create and Install a Certificate for HTTPS for more information.

Extensible Authentication Protocol

VoiceConsole On Prem deployment distributes credentials to devices in the device profile. Once these credentials are on the devices, the devices use them to connect to the wireless network. Credentials only need to be entered once per site, operator, or device until the credentials need to be changed. When necessary, VoiceConsole On Prem deployment manages the distribution of the new credentials.

How to configure EAP in VoiceConsole On Prem deployment is described in detail in Configure EAP for the Site.

Site-wide Configuration

Although VoiceConsole On Prem deployment offers three credential association types - site-based, device-based, and operator-based - each of these must be configured on a site-wide basis. That is, even if the client selects to have device- or operator-based security, all devices and operators at a particular site must use the same type of security. This is reinforced by the User Interface, which requires that you select one and only one EAP type per site. See the section labeled Association Types for more information on these types.

Restricted User

If EAP authentication is selected for the restricted user, the device connects to the network with a restricted set of credentials, identifying itself as a Honeywell device. It can only connect to VoiceConsole On Prem deployment for the purpose of loading the proper credentials. You can further restrict this user's access by assigning it to a different SSID that only has access to a portion of the network. This different SSID may be on an open network. In this case, you would not need credentials for the restricted user. Without the restricted user solution, Honeywell would require that the credentials be loaded onto each device through the serial port if the credentials expire or become obsolete when the password is changed.

The restricted user also has the following roles:

- When the device is in the charger, the restricted user logs onto the network.
- Credentials are distributed through the restricted user through TouchConfig or over the

network.

- The restricted user can load tasks and operators.

> **NOTE**
> If you are using static IP addresses rather than DHCP, the restricted user must be on the same network as the non-restricted network, because devices cannot support two static IP addresses.

You can configure the following Extensible Authentication Protocol methods for each site:

- **EAP-TLS**: EAP-Transport Layer Security
- **EAP-TTLS/MSCHAPv2**: EAP-Tunneled Transport Layer Security/Microsoft Challenge Handshake Authentication Protocol
- **PEAPv0/EAP-MSCHAPv2**: Protected Extensible Authentication Protocol/Microsoft Challenge Handshake Authentication Protocol
- **PEAPv1/EAP-GTC**: Protected Extensible Authentication Protocol/Generic Token Card
- **LEAP**: Lightweight Extensible Authentication Protocol

Association Types

Because the devices do not provide a user interface for entering usernames, passwords, and Personal Identification Numbers, Honeywell developed the concept of *Association Types*. Association types determine the point at which credentials are required.

For each site, you can select one of the following:

Site Based

There is a single username and password or certificate for all operators and devices at a given site.

Device Based

Each device has its own username and password or certificate. In this configuration, operators don't need to be involved in the authentication process, because all authentication is between the device and the authentication server.

Operator Based

Each operator must log onto VoiceConsole On Prem deployment to enter a username and password and, optionally, a PIN. The operator must enter that password (and PIN, if selected) on the device before the user can connect to the full network.

The EAP options are either configured by or with significant input from an IT professional. It is this person who makes the decision as to which type of configuration is used at this site and has the needed information.

What You Need

If you are configuring VoiceConsole On Prem deployment for EAP, you need the following information.

- The EAP type used.
- Association type.
- Type of credentials that the client wants the device to use to authenticate to the network.
- Whether the user needs to enter a PIN to get onto the network.
- Whether the device logs off when it goes into the charger.
- The username and password or certificate of the restricted user that the device uses when it is in the charger in order to communicate to VoiceConsole On Prem deployment.
- If Certificate is selected, Honeywell strongly recommends using PEM or base 64 formatted certificates.
- The PIN that the user must enter to log onto the network.

LDAP settings are optional for site- and device-based association types. They are required for the operator-based association type. If you choose to use LDAP, you also need:

- The hostname of the machine on which the LDAP server is running.
- The port on which the LDAP server is listening.
- The username that VoiceConsole On Prem deployment uses when attempting to find the distinguished name of an operator in the Directory Service.
- The password that VoiceConsole On Prem deployment uses when attempting to find the distinguished name of an operator in the Directory Service.
- The search base that VoiceConsole On Prem deployment uses when trying to find a particular user in the Directory Service.
- The attribute that VoiceConsole On Prem deployment searches on when trying to find a particular user in the Directory Service.
- The attribute that VoiceConsole On Prem deployment modifies when changing the password of a user in the Directory Service.

SAML SSO Configuration

This process configures VoiceConsole On Prem deployment to use SAML-based single sign on.

SAML (Security Assertion Markup Language) is an open source format for authentication and authorization between an Identity Provider and a Service Provider which is used to offer a single sign on service.

- Service Provider - In this instance, it is VoiceConsole On Prem deployment.
- Identity Provider - The identity provider creates, maintains, and manages the identity information for users and provides user authentication to service providers.

> **NOTE**
> SAML is the only supported SSO type. Other types such as federation are not currently supported.

Enable SAML SSO During Installation

This option must be selected during VoiceConsole On Prem deployment installation.

> **IMPORTANT**
> This option is only available during new installations of VoiceConsole On Prem deployment. SAML cannot be configured during an upgrade installation.

Configure SAML

The following process builds the trust between the Identity Provider (IDP) server and VoiceConsole On Prem deployment.

1. Configure the IDP as follows:
   a. **SSO URL**: https://<hostname>:<port>/VoiceConsole/j_spring_security_check
      - If VoiceConsole is configured without HTTPS, use **http** instead of **https**.

   b. **entityID**: com:honeywell:voiceconsole:sp (default)

   c. **Attributes**: Create an attribute named **UserID**. The attribute name is case sensitive. The value returned by the IDP must exactly match the corresponding username in the VoiceConsole database. The attribute may be unique or mapped to another user profile value, such as an email address or username.

      New installations may require a database query to update a default user to match the value returned by the IDP.

      > **IMPORTANT**
      > Disabling a user in VoiceConsole does not prevent the user from logging into the application. Delete the user to remove the mapping, or temporarily modify the username to prevent SAML mapping.

      SQL Query

```
UPDATE "VOC_USER" SET password =
'$2a$12$LJaP0jW9V5l4upx30k/46uOTimYTfQYEkxkO7bfcJAA78y2W1Qk/O',
enabled = 1, changePwd = 0, currentSite = -1, failedLoginAttempt = 0,
failedLoginAttemptTime = NULL WHERE name = 'vocollect';

                            UPDATE "VOC_USER" SET
NAME='talkman@honeywell.com' WHERE NAME='vocollect';
```

- The initial query resets the default 'vocollect' account to the desired state for a clean remap. Update the talkman@honeywell.com with the desired UserID value.
- If desired, after additional accounts are created, this vocollect account can be remapped back to default to allow for both admin and vocollect to be used with the Talkman Startup Tool. Otherwise, only the default 'admin' user can be used for profile loading.

2. Copy the SAML metadata file from the IDP server to the VoiceConsole On Prem deployment installation directory as follows:
   a. Create a directory named **idp-meta** at <*VoiceConsole installation directory*>\Vocollect\VoiceConsole\tomcat\webapps\VoiceConsole.
   b. Copy the SAML metadata file of the IDP server to the directory created above.
   c. Rename file to **idp-meta.xml**.
   d. Restart the VoiceConsole On Prem deployment service.
3. Generate the VoiceConsole On Prem deployment SAML metadata file.
   a. Download by going to the following URL: <protocol>:*//<VoiceConsole DNS*>/VoiceConsole/saml/metadata/meta.action
4. Configure the VoiceConsole On Prem deployment SAML metadata file in the IDP server.

> **NOTE**
> Ensure that **UserID** is configured to send as an attribute in assertion.

> **IMPORTANT**
> Talkman Startup Tool and REST API authentication is available using only the default users (admin and vocollect) with the default passwords.

If the admin or vocollect account password needs to be reset to default value, use the appropriate SQL command:

```
UPDATE VOC_USER SET PASSWORD = '21232f297a57a5a743894a0e4a801fc3' WHERE NAME =
'admin';
```

```
UPDATE VOC_USER SET PASSWORD = 'e741639850633f3359b6ab2dab3158a5' WHERE NAME =
'vocollect';
```

Cloud Hosting

> **NOTE**
> This section applies only to a VoiceConsole On Prem deployment.

Contact technical support if you are considering a cloud installation.

Honeywell officially supports running VoiceConsole in a cloud environment. The Honeywell testing environment is the Microsoft Azure platform for cloud hosting. A customer-managed VoiceConsole instance, even if cloud hosted, is still considered a VoiceConsole On Prem deployment.

> **IMPORTANT**
> Other environments can be used so long as they meet the expected requirements. Honeywell cannot account for all variables and unknowns with other cloud environments, but this a list of best practices. Should an issue be encountered due to these unknowns, Honeywell provides best effort support to determine if the problem relates to our solution or the environment and help to pin point the cause.

For more information on Azure, refer to the Azure documentation.

Set up the Cloud Environment

Machine Requirements

When planning a cloud installation, Honeywell recommends following the server requirements with an additional margin to allow for cloud latency. Consult with Technical Support or Professional Services for further questions regarding cloud system specifications.

Sample Configuration

The following example is provided for an operation which might see 150-600 operator shift start size.

- Quad Core CPU
- Minimum 16GB RAM
- Minimum 60 GB storage space
- Microsoft Windows Server 2019 OS

- Database
  - Microsoft SQL Server 2019 database has been tested. The database is installed on a separate server and is not included in the machine requirements above.

Database Support

Microsoft Azure SQL Database is not supported. The customer must install one of the supported databases in their cloud environment.

Ports

The following ports must be opened by the network/cloud management team:

- 9090 bi-directional
- 9091 bi-directional
- 9443 bi-directional
- 21050 outbound

More information on these ports can be found here.

General Information

- Honeywell does not recommend leaving VoiceConsole as an public-facing internet accessible application.
- Talkman devices cannot be configured to directly utilize a VPN connection.
- File transfers, such as loading a VoiceClient into VoiceConsole or loading a profile onto a device may take longer in a cloud environment than in a local installation.
  - Follow the Best Practices for Loading Device Profiles.
  - Use the Schedule feature to perform maintain jobs during times of low usage.

Contact Support Regarding Known Issues

Contact Technical Support for information regarding the following known issues.

- Azure high latency storage block issues with log files
- An Azure SQL managed database instance is not supported

CHAPTER 4

VOICECONSOLE DATABASE

VoiceConsole On Prem deployments require a database to be installed. VoiceConsole no longer supports an embedded database.

The following databases are supported with this release:

- Microsoft SQL Server 2019 Express
- Microsoft SQL Server 2019 Standard
- Microsoft SQL Server 2022 Express
- Microsoft SQL Server 2022 Standard
- Microsoft SQL Server 2025 Standard
- Oracle Database 19c
- Oracle Database 21c
- Oracle Database 21c Express Edition (XE)

> **IMPORTANT**
> The Express databases are recommended to replace the embedded database used in earlier versions. These Express databases are recommended for deployments with 300 devices or less.

Notes for VoiceConsole Operating Systems and Databases

- Honeywell has only tested upgrades with supported databases. You may still upgrade from an unsupported database at your own risk. If you have questions regarding upgrading from an unsupported environment, please contact Honeywell technical support.
- VoiceConsole is certified to work with SQL Server database encryption. An automated performance test was executed on an encrypted SQL database. Encryption can be enabled through the SQL Server Database. While not tested with other database encryption vendors, it is expected to work.
- **Express databases**: Honeywell recommends the Express database options for sites with less than 300 devices.
- **Oracle**: When creating a new Oracle database, ensure that you are using the AL32UTF8 character set for non-English versions of VoiceConsole.

- **SQL**: If the SQL Server database collation is not set to be case insensitive, VoiceConsole may not work properly. When creating a new SQL Server database, ensure that you choose the proper collation for the language that the system is in with _CI included in the collation name.

New Installation

For new installs, the database must be installed before VoiceConsole. A user with create, read, and write permissions must be created for the database, This information is used during the VoiceConsole installation.

Upgrade Installation

External Database

If the previous installation included an external database, then the upgrade installation can be performed normally.

Embedded Database

> **IMPORTANT**
> Because the embedded database is no longer supported, the silent installation method cannot be used to upgrade a VoiceConsole deployment with an embedded database.

If the previous installation included an embedded database, follow these steps:

1. Install a database. Honeywell has tested the following Express databases:
    - Oracle Database 21c Express Edition
    - Microsoft SQL Server 2019 or 2022 Express
2. Run the VoiceConsole Database Migrator.
3. Install the VoiceConsole upgrade.

Oracle Database 21c Express Edition

Follow these instructions to install, setup, and configure VoiceConsole to use Oracle Database 21c Express Edition (XE).

1. Download Oracle Database 21c Express Edition from www.oracle.com.
2. Open a Command Prompt window as an administrator, and run the following commands:

a. Type the command below to connect to the database:

```
sqlplus / as sysdba
```

b. From the SQL> prompt type:

```
ALTER SESSION SET CONTAINER = xepdb1;
```

c. {{TABLESPACE_NAME}} is to replaced with the name assigned to the database in the following command.

```
CREATE TABLESPACE {{TABLESPACE_NAME}} DATAFILE '{{TABLESPACE_
NAME}}.dbf' SIZE 100M AUTOEXTEND ON NEXT 10M MAXSIZE UNLIMITED
ONLINE;
```

d. {{USER_NAME}} and {{PASSWORD}} are to be replaced with the credentials to be used to access the database in the following command.

```
CREATE USER {{USER_NAME}} IDENTIFIED BY {{PASSWORD}} DEFAULT
TABLESPACE {{TABLESPACE_NAME}} QUOTA UNLIMITED ON {{TABLESPACE_
NAME}};
```

e. {{USER_NAME}} to be replaced with the credential from the earlier command

```
GRANT CONNECT, RESOURCE, DBA TO {{USER_NAME}};
```

f. {{USER_NAME}} to be replaced with the credential from the earlier command

```
GRANT ALL PRIVILEGES TO {{USER_NAME}};
```

3. During VoiceConsole installation, make the following entries on the select Database Configuration tab:
   - Database Server: Oracle
   - Select **Basic Settings**
   - Database Hostname: IP address of the host machine, which can be determined by running ipconfig at a command prompt
   - Database Port: 1521 (default)
   - SID / Service Name: is xepdb1 (default)

- Database Username: as configured above
- Database Password: as configured above

Microsoft SQL Server 2019 or 2022 Express

Follow these instructions to install, setup, and configure VoiceConsole to use Microsoft SQL Server 2019 or 2022 Express.

1. Download SQL Server 2019 or 2022 Express from www.microsoft.com and install, selecting **basic type**.
2. Download SQL Server Management Studio (SSMS) from www.learn.microsoft.com and install it.
3. Open SSMS and connect to Database Engine
   - Set the Server name to localhost\SQLExpress
   - Set Authentication to Windows Authentication.
   - Click **Connect**.
4. In the left Object Explorer pane, select **Databases**, right-click, and select **New Database**.
   - Enter the name of the new database and click **OK**.
5. Select **Security** > **Logins** and right-click to select **New Login**.
   - Select **SQL Server authentication**.
   - Enter login name and password.
   - Uncheck **User must change password at next login**.
   - Click **OK**.
6. Select **Security** > **Logins** > (the new login created in the previous step) and right-click to select **Properties**.
   - Select the **Server Role**s page.
   - Check the **sysadmin** server role and click **OK**.
7. Right-click on DB engine (this is labeled localhost\SQLExpress) and select **Properties**.
   - Select the **Security** page.
   - Set Server authentication as **SQL Server and Windows Authentication mode** and click **OK**.
8. Launch SQL Server 2019 Configuration Manager.
9. Click **SQL Server Network Configuration**.
10. Double click on **Protocols for SQLEXPRESS**.

- If TCP/IP protocol is disabled, a default choice for security with SQL Server installations, right-click on **TCP/IP** protocol in the context menu and choose **Enable**.
- Double-click on **TCP/IP** protocol and click on the **IP Addresses** tab.
- Scroll down to the IPAll section.
- Double-click the cell next to **TCP Dynamic Ports** and delete any number in that cell.
- Double-click the cell next to **TCP Port** and enter 1433.
- Click **Apply** and then **OK**.

11. Click on **SQL Server Services**.
12. In the right-hand pane, note that the SQLEXPRESS instance of SQL Server is running. Right-click **SQL Server (SQLEXPRESS)** and select **Restart**. The server stops and then restarts, which applies the changes made above.
13. During VoiceConsole installation, make the following entries on the select Database Configuration tab:
    - Database Server: SQL Server
    - Select **Basic Settings**
    - Database Hostname: localhost\SQLExpress
    - Database Port: 1433 (default)
    - Database Username: as configured above
    - Database Password:.as configured above
    - Database Schema: dbo

APPENDIX

5 Back Up and Restore the VoiceConsole Database

This section describes how to back up and restore the VoiceConsole database for VoiceConsole On Prem deployment. Note that the methods described here are among the many options available.

> **WARNING**
> Honeywell strongly recommends having your Database Administrator develop and implement a disaster recovery plan specific to your company's needs.

See the vendor documentation for information on backing up and restoring the database.

Oracle 19c and 18c Enterprise

For more information on backing up and restoring Oracle enterprise databases, see the information found in the document Oracle Database 2-Day DBA and the section titled *Performing Backup and Recovery*. See also:

- Oracle 18c - www.docs.oracle.com/en/database/oracle/oracle-database/18/bradv/introduction-backup-recovery.html
- Oracle 19c - www.docs.oracle.com/en/database/oracle/oracle-database/19/bradv/introduction-backup-recovery.html

Assumption

The procedures in this section were developed based upon the assumption that the default Flash Recovery Area settings were chosen in the Database Configuration Assistant when the VoiceConsole database was created.

How to Create a Backup of the VoiceConsole Database for VoiceConsole On Prem Deployment

Log into the Database

1. Open the Oracle Enterprise Manager Database Control for the VoiceConsole database.
2. Log in with the SYS username and password.

3. Select **Connect As SYSDBA** from the dropdown list.
4. Click the **Login** button.

Configure ARCHIVELOG Mode for the VoiceConsole Database

1. From the *Database Instance* home page, select **Maintenance** > **Recovery Settings**.
2. In the **Media Recovery** section, check the box for **ARCHIVELOG Mode** if it is not already checked.
3. Click **Apply** to save your changes. You are now taken to the Confirmation screen. It informs you that you need to restart the database for the change to take effect.

   > **NOTE**
   > Restarting the database makes the VoiceConsole On Prem deployment unusable for a short period of time. Perform this step only when no one is using VoiceConsole.

4. Click **Yes** on the Confirmation screen. A page asking you to input Host and Target Database Credentials appears.
5. Enter the OS username and password you used to install Oracle for the **Host Credentials**.
6. Leave the Database Credentials user name and password blank.

   If you receive an error like *RemoteOperationException: ERROR: wrong password for user*, try entering *both* the Host Credentials and Database Credentials. If this doesn't work, set up the OS user to be able to log on as a batch job in the server's Local Security Policy. To do this, follow these steps:

   a. Select **Start** > **Settings** > **Control Panel** > **Administrative Tools** > **Local Security Policy**.
   b. In **Local Policies**, select **User Rights Assignment**.
   c. Add the OS user to Log on as a Batch Job. Now you should be able to get past the Host and Target Database Credentials page.
   d. In Restart Database: Confirmation page, click the **Yes** button. You are taken to the Restart Database: Activity Information page, informing you that the database restart may take some time.
   e. Wait about five minutes, and then click the **Refresh** button. This should take you back to the Database Login page.

7. Log back in using the SYS username and password, and then choose **Connect As SYSDBA** from the drop-down list. After you restart the database, the VoiceConsole system can be used again.

Configure the Backup Policy

1. From the *Database Instance* home page, go to **Maintenance** > **Backup Settings** > **Policy**.
2. Under **Backup Policy**, check the box beside **Automatically backup the control file and server parameter file (SPFILE) with every backup and database structural change**.

3. Scroll to the bottom of the page, and under the **Host Credentials** section, enter the OS username and password.
4. Click **OK**.

Schedule a Database Backup

1. From the *Database Instance* home page, go to **Maintenance** > **Schedule Backup**.
2. At the bottom of the **Schedule Backup** page, enter your OS Host Credentials.
3. Under the section **Oracle-Suggested Backup,** click **Schedule Oracle-Suggested Backup**.
4. Select **Disk** as the destination media for the backup.
5. Click **Next**. You are now be taken to the **Setup** page, which explains how the Oracle-suggested backup works.
6. There are no settings on this page; so click **Next**.
7. You are now be taken to the **Schedule** page where you need to specify the start date, time zone, and daily backup time.
8. We recommend that you schedule the daily backup for a time when database activity is low.
9. Click **Next**. You are taken to the **Review** page. Here you can see some details of the backup schedule.
10. Click **Submit Job** to complete the process.
11. In the **Status** page, you can click **View Job** or click **OK** to return to the database home page.

Restore a Database Backup

1. From the *Database Instance* home page, select **Maintenance** > **Perform Recovery**.
2. Recover to the current time or a previous point-in-time.
3. Scroll to the bottom of the page. In the **Host Credentials** section, enter the OS username and password.
4. Click **Perform Whole Database Recovery**. A **Confirmation** page now appears, informing you that this operation temporarily shuts down the database.
    a. Stop the VoiceConsole service.
    b. On the **Confirmation** page, click **Yes**. You are taken to a **Recovery Wizard** page, informing you that it takes a few minutes to shut down and restart the database.
    c. Wait a few minutes, then click the **Refresh** button on this page.
5. On the *Database Instance* page, click **Perform Recovery**.
6. Enter your OS Host Credentials.
7. Click **Continue**. Another *Database Login* window appears.
8. Enter the SYS username and password.

9. Select **SYSDBA** from the **Connect As** login. You are taken back to the **Perform Recovery** page with an information message at the top saying that the current status is MOUNTED.
10. Click the **Recover to the current time or a previous point-in-time** radio button.
11. Scroll to the bottom of the page, and under the **Host Credentials** section, enter the OS username and password.
12. Click **Perform Whole Database Recovery**.
13. On the **Perform Whole Database Recovery: Point-in-time** page, specify whether to recover all transactions to your database up to the present time (complete recovery), or only transactions up through some point in time (point-in-time recovery).
14. Select **Recover to the current time**.
15. Click the **Next** button.
16. The next page asks if you want to restore the files to a different location. Select **No**.
17. Click the **Next** button. The **Review** page displays the options that you chose.
18. Click the **Submit** button. A window indicating progress appears.
19. When the process is complete, the **Perform Recovery: Result** page appears with a message that the operation succeeded.
20. Scroll to the bottom of the page, and click the **Open Database** button.
21. Click **OK** on the **Result** page.
22. Start the VoiceConsole On Prem deployment service.

SQL Server

For more details regarding backup and restore in SQL Server, see Microsoft's documentation.

Assumptions

The procedures in this section were developed based upon the following assumptions:

- The VoiceConsole database is using the simple recovery model.
- VoiceConsole On Prem deployment 6.6 is installed on the server to which a database is being restored. The instructions below include stopping the VoiceConsole On Prem deployment 6.6 service on the machine to which the database is being restored.
- This document addresses the architecture of a primary server with VoiceConsole On Prem deployment and the database installed on the same server, and one or more backup servers with VoiceConsole On Prem deployment and the database installed. If a different architecture is being used, then some of the steps are different.
- The database cannot be in use during the time of a restore operation; so any instance of the VoiceConsole On Prem deployment 6.6 service pointing to the database being restored must be stopped.

- The restore operation is always restoring an existing VoiceConsole database. The procedures listed below do not address restoring the database to a database server on which there is no existing VoiceConsole database. This is possible, but the procedure is not covered in this document.

How to Create a Backup of the VoiceConsole Database

1. Open **SQL Server Management Studio** and connect to the database server.
2. Click **Databases**.
3. Right-click on the VoiceConsole database (the actual name is whatever was chosen at install time).
4. Select **Tasks**.
5. Select **Back Up**. The **Back Up Database** window appears.
6. In the **Backup type** drop-down list, select **Full**.
7. For Backup component, select **Database**.
8. In the **Backup set** section, enter a name for the backup, or accept the default.
9. Enter a description, if desired.
10. In the **Destination** section, select **Disk** for **Back up to**.
11. Accept the default destination, or use the **Add** and **Remove** buttons to specify a different destination.
12. In the **Select a page** navigation bar on the left, select **Options**.
13. In the **Overwrite media** section, select **Back up to the existing media set**.
14. Select **Overwrite all existing backup sets**.
15. In the **Select a page navigation bar** on the left, select **General**.
16. Click **OK** at the bottom of the window. The progress meter at the bottom left of the window indicates the status of the process.
17. When the backup is complete, click **OK** to close the **Back Up Database** window.

How to Schedule a Backup of the VoiceConsole Database

1. Follow the steps in How to Create a Backup of the VoiceConsole Database.
2. On the menu bar at the top of the **Back Up Database** window, select **Script > Script Action to Job**. The **New Job** window appears.
3. On the **General** page, change the name of the job, the owner, and description if desired, or accept the default settings.
4. In the **Select a page** navigation bar on the left, select **Schedules**.
5. Click the **New** button at the bottom of the window. The **New Job Schedule** window appears.

6. In the **Name** field, give the schedule a name.
7. Make sure that the Schedule type is set to **Recurring**.
8. Use the rest of the fields in this window to set the schedule and time that the backup is to run. Honeywell recommends backing up the database daily and scheduling the backup to run at a time of light system usage.
9. When you are done configuring the schedule, click **OK** in the **New Job Schedule** window.
10. In the New Job window, click **OK**. The script that creates the backup is to run. The progress meter at the bottom of the **Back Up Database** window indicates the status of the process.
11. When the process is complete, click **Cancel** at the bottom of the **Back Up Database** window to close the window.
12. Verify that the backup job was created by expanding **SQL Server Agent**, and then expanding **Jobs**. The new backup job appears.

How to Restore the VoiceConsole Database

How to Restore a Backup of the VoiceConsole Database to the Server on Which the Backup was Created

1. VoiceConsole On Prem deployment needs to be stopped to restore the database. The application is unavailable while the database is being restored.
2. Select **Start > Control Panel > Administrative Tools > Services**.
3. Select the VoiceConsole On Prem deployment service, and stop the service.
4. Open SQL Server Management Studio, and connect to the database server.
5. Expand Databases.
6. Right-click on the VoiceConsole database (the actual name that was chosen at install time).
7. Select **Tasks**.
8. Select **Restore**.
9. Select **Database**. The **Restore Database** window appears.
10. The default settings should be correct. Click **OK**. The restore process begins. The progress meter at the bottom left of the window indicates the status of the process.
11. When the process is complete, click **OK** to close the window.
12. Start the VoiceConsole On Prem deployment service.

How to Restore a Backup of the VoiceConsole Database to a Different Server Than the One on Which the Backup was Created

1. Copy the backed up database file to the server to which the backup is to be restored.
2. Select **Start** > **Control Panel** > **Administrative Tools** > **Services**.
3. Select the VoiceConsole On Prem deployment service, and stop the service.
4. Open SQL Server Management Studio, and connect to the database server.
5. Expand Databases.
6. Right-click on the VoiceConsole database (the actual name that was chosen at install time).
7. Select **Tasks**.
8. Select **Restore**.
9. Select **Database**. The **Restore Database** window appears.
10. In the **Source for restore** section, select **From device**.
11. Click the **...** button. The **Specify Backup** window appears.
12. For **Backup Media**, select **File (.bak)**.
13. Click the **Add** button to navigate to the location of the backup file.
14. Browse to the backup file, and click **OK**. The backup location is now listed in the **Specify Backup** window.
15. Click **OK**.
16. In the **Select the backup sets to restore** table, check the box in the **Restore** column for the backup.
17. In the **Select a page** navigation bar on the left, select **Options**.
18. Select the check box for **Overwrite the existing database**.
19. All other settings should be correct. Click **OK** at the bottom of the **Restore Database** window. The restore process begins. The progress meter located in the bottom left corner of the window indicates the status of the process.
20. When it is complete, click **OK** to close the **Restore Database** window.

> **IMPORTANT**
> For this procedure to be successful, you must perform the following steps.

1. SQL Server logins have a unique Security ID (SID) that belongs to a particular instance of SQL Server.
2. If there are any users in the VoiceConsole database, you must update the user records in the restored database so that they refer to the SID of the corresponding SQL Server login on the instance of SQL Server on this server.

3. Run the following command against the VoiceConsole database in SQL Query Analyzer to find users that must have the SID changed:

```
EXEC sp_change_users_login' Report'
```

4. If any records are returned, run the following command for each user returned:

```
EXEC sp_change_users_login
'Auto_Fix', username
```

5. where *username* represents the user name that needs to have its SID fixed.
   The command should display the following output indicating that the user's SID was fixed:

```
The row for user "voice_console_db_22" will be fixed by updating its login
link to a login already in existence.
The number of orphaned users fixed by updating users was 1.
The number of orphaned users fixed by adding new logins and then updating
users was 0.
```

6. Start the VoiceConsole On Prem deployment service.

CHAPTER 6

INSTALL VOICECONSOLE FOR THE FIRST TIME

This section describes how to install VoiceConsole On Prem deployment for the first time; that is, when there are no previous instances of VoiceConsole On Prem deployment at your site.

> **NOTE**
> To avoid any potential issues, Honeywell highly recommends **against** installing VoiceConsole On Prem deployment from a shared network drive.

- Close all other applications before installing.
- When installing with Windows, you must run the installer as an administrator. When installing with Linux, the installer must be run as root.
- On Windows, navigate to install.exe in the downloaded location. On Linux, if you are using Intel or AMD architecture, copy the files from the downloaded location, to your computer, and execute the install.sh file.
- When you install this version of VoiceConsole On Prem deployment for the first time, the following two users are installed with the application with default passwords:
    - admin/admin
    - vocollect/voiceworks

System Components

The following system components are installed when you install VoiceConsole On Prem deployment 6.6.

- Apache Tomcat
- Java JRE
- VoiceConsole Web Application
- Local Licensing Server
- VoiceConsole Online Help
- Hardware Documentation

Available Ports and Protocols

VoiceConsole On Prem deployment uses the following protocols:

- Internet Control Message Protocol (ICMP)
- Hypertext Transfer Protocol (HTTP)
- Hypertext Transfer Protocol with Secure Sockets Layer (HTTPS)

The Apache Tomcat Service uses the following ports by default for proper startup and shutdown:

Use	Default	Direction
HTTP	9090	Inbound
WebSocket	9091	Both
HTTPS	9443	Inbound (Browser Only)
Shutdown	9006	Internal

The Local Licensing Server uses the following port:

Use	Default	Direction
Licensing Server	1443	Both

If these ports are not available, the next available ports are used.

Linux Tips and Tricks

Make all downloaded files executable

After unzipping the VoiceConsole download, navigate to the unpacked folder. Run the command `cd <unpacked VoiceConsole zip folder> && chmod -R u+x *` to mark all files executable for the user to run.

Check and set recommended umask settings

Run the `umask` command and verify the number returned.

- If the value is not 0022, set it to 0022 by running this command: `umask 0022`
- By default the value may be 0027 which is more restrictive and can block files needed for the VoiceConsole installation.

Ensure chkconfig installed

Verify that the machine has `chkconfig` installed.

- If it does not, install it with this command: `sudo dnf install chkconfig`

Standard Installation Procedure

1. If one is not already installed, install the database platform. Instructions for using an Express database are included in the following sections below: Oracle Database 21c Express Edition and Microsoft SQL Server 2019 or 2022 Express.
2. Create a blank VoiceConsole database and a user with create, read, and write permissions to the database. When you run the installer in the next step, the database schema is created automatically.
3. Run the installer.
   The **Introduction** window appears.

4. Click **Next**.
   The **License Agreement** window appears.
5. Scroll down to view the entire license agreement. It is necessary to scroll through the entire agreement to view all terms of the license agreement. Then click **Next**.
   The **Select Installation Path** window appears.
6. Click **Next** to install to the default path or, if necessary, browse to the desired installation path and click **Next**. The **Software to Install** window appears. All software shown is installed.
7. Click **Next**.
   The **Copying Software** window displays the installer progress during the copy of the individual selected software and the entire copying process.
8. When the copying process is finished, click **Next**.
   The **Remote Upgrade** window appears.
9. Select **No**, and click **Next**.
   The **Cluster Configurations** window appears.
10. Select **No** to select a standard installation, and click **Next**. If you want to install to a clustered environment, see Install into a Clustered Environment for more information.
    The **Configuration and Installation** window displays three tabs to configure your installation.
11. Click the **Tomcat Server Configuration** tab.
12. Enter the appropriate information for your Tomcat server configuration.
    a. **Tomcat Login Information**
       Choose an account, and enter the account username and password, if necessary. In Windows, if you select **Use Existing Account**, ensure that the account entered has the necessary permission described below:

       > NOTE
       > If you want to use NT authentication for SQL Server databases for a Windows installation, you must use an existing account.

       > IMPORTANT
       > When using an existing account, set the permissions for starting the Tomcat service. Access \Domain\Users\ to enable the logon for the particular user group and to set permissions.

       - **Read** permission to the directory from which the installation program is being run
       - **Log On As a Service** rights and permissions (refer to Tomcat documentation for setup information).

- **Write** permissions to all paths provided during installation for the install folder, log files directory, application files location
- **Write** permissions to the shared drive for a clustered install (if applicable)

b. **Tomcat Path Configuration**
Confirm the default path to the location where the log files are to be stored, or - if necessary - browse to the desired path. Log files track user activities in the VoiceConsole On Prem deployment application.

c. **Tomcat Port Configuration**
Confirm the default ports that the application server uses, or - if necessary - enter different ports.

13. Click the **Database Configuration** tab.
14. Enter the appropriate information for your database.

> **NOTE**
> For Express database installs, the Advanced fields below are not used.

a. SQL Server
For more information on using a SQL Server Express database with VoiceConsole, see Microsoft SQL Server 2019 or 2022 Express.
For installations using SQL Server, you must enter the information listed in the following table:

> **NOTE**
> SQL Server does not enable TCP/IP by default. You must manually enable TCP/IP before the installation can complete successfully.

- **For Basic**

Field	Description	Valid Entry Format
Database Hostname	DNS name or IP address of the machine hosting the database.	
Database Port	The port that the database uses.	Must be an integer between 1 and 65535. Default is 1433.
Database Name	The name of the database.	

- **For Advanced**

Field	Description	Valid Entry Format
JDBC URL	The JDBC URL for the database.	jdbc:sqlserver://<host>:<port>; DatabaseName=<database name>

- **For Both Basic and Advanced**

Field	Description	Valid Entry Format
Authentication Type (Windows installs only where existing user specified for Tomcat Server configuration)	The authentication type used to connect to the database.	If installing on Windows and an existing user was specified for the Tomcat Service configuration, you can select to use NT Authentication. Otherwise, select SQL Server Authentication.
Database Username	The username that the application should use to log into the database. This is disabled if using NT Authentication.	
Database Password	The password of the user that the application should use to log into the database. This is disabled if using NT Authentication.	
Database Schema	The database schema that you are using.	

b. Oracle
For more information on using an Oracle Express database with VoiceConsole, see Oracle Database 21c Express Edition.
For installations using Oracle, you must enter the following information:

- **For Basic**

Field	Description	Valid Entry Format
Database Hostname	DNS name or IP address of the machine hosting the database.	
Database Port	The port that the database uses.	Must be an integer between 1 and 65535. Default is 1521.
SID or Service Name	The SID or Service Name of the Oracle database.	

- **For Advanced**

Field	Description	Valid Entry Format
JDBC URL	The JDBC URL for the database.	jdbc:oracle:thin:@<host>:<port>:<database name>

- **For Both Basic and Advanced**

Field	Description	Valid Entry Format
Database Username	The username of a user with administrative privileges.	
Database Password	The password of a user with administrative privileges.	

15. Click the **VoiceConsole Configuration** tab.
16. Enter the appropriate information for your VoiceConsole On Prem deployment configuration.
    - **VoiceConsole Hostname**
      Specify the hostname of the machine onto which you are installing VoiceConsole On Prem deployment.
    - **Display Dialog Port**
      Confirm the default port that the application server uses for the Display Dialog feature.
    - **Enable HTTPS Support**
      Select to enable secure HTTPS on all pages of VoiceConsole On Prem deployment. Certain pages are still secure if this check box is not selected.
    - **Storage Directory**
      Specify where you would like to have application files stored.
      The storage directory must have enough room to store device logs, which could grow very large in a short amount of time. Additionally, VoiceConsole On Prem deployment performance may be negatively affected if the storage directory is on a shared network drive with low throughput. If not required for clustering, Honeywell recommends having this location on a local drive.
    - **Enable SAML SSO**
      Check to enable Federation SAML (Security Assertion Markup Language) Single Sign On.Additional configuration is necessary to use this feature after the installation is completed.

    > **NOTE**
    > SAML SSO cannot be enabled during an upgrade installation. It can only be enabled during a new installation.

17. Click the **License Server Configuration** tab.

18. Enter the appropriate information for the VoiceConsole On Prem deployment to enable the local licensing server:
    a. **Port:** The port to be used by the license server. The default is **1443**.
    b. **Password:** Enter the password for the local license server.
19. Click **Install Now**.
    The installation begins. When the first part of the VoiceConsole On Prem deployment installation is successfully completed, click **OK**.
    If installing on Windows, the **Setup Shortcuts** window appears. If installing on Linux, go to step 19.
20. If desired, select the program group in the **Start** menu to place the shortcut within or edit the path of the shortcut. If you do not want a VoiceConsole On Prem deployment shortcut on the **Start** menu, clear the **Create shortcut in the Start menu** checkbox. A shortcut to VoiceConsole On Prem deployment is placed on the desktop automatically after the installation process completes.
21. Click **Next**.
    When the installation is complete, the **Installation Finished** window appears.
22. If desired, click **Generate script** to generate an .xml file with your installation choices to use for silent or automatic installations.
23. Click **Done**.
    The VoiceConsole Installer closes, and the VoiceConsole On Prem deployment application opens.

Install into a Clustered Environment

This installation procedure is different from the standard installation procedure in that you must install on each node in the cluster individually. The license that was provided to you must be imported into each installation.

> IMPORTANT
> When installing in a clustered environment, contact Honeywell for assistance with licensing.

> NOTE
> If you are installing into an Active/Passive cluster configuration, make sure that the active node has access to shared resources—for example, the log and firmware files location.

Install Into the First Node

1. If one is not already installed, install the database platform.
2. Create a blank VoiceConsole database and a user with create, read, and write permissions to the database. When you run the installer in the next step, the database schema is created automatically.
3. Run the installer.
   The **Introduction** window appears.
4. Click **Next**.
   The **License Agreement** window appears.
5. Accept the terms of the license agreement and click **Next**.
   The **Select Installation Path** window appears.
6. Click **Next** to install to the default path, or—if necessary—browse to the desired installation path and click **Next**.
   The **Software to Install** window appears.
7. Click **Next**.
   The **Copying Software** window displays the installer's progress during the copy of the individual selected software and the entire copying process.
8. When the copying process is finished, click **Next**.
   The **Cluster Configurations** window appears.
9. Select **Yes**, select a directory that can be accessed by all cluster nodes by the same path, and click **Next**.
   For Windows operating systems, Honeywell recommends using a UNC path (ex. \\ComputerName\Path) as the **Shared Storage** directory.
   The **Configuration and Installation** window displays four tabs to configure your installation.
10. Enter the appropriate information for your Tomcat server configuration.
    - **Tomcat Login Information**
      Choose an account, and enter the account username and password, if necessary.
      In Windows, if you select **Use Existing Account**, ensure that the account entered has the necessary permission described below:

      If you want to use NT authentication for SQL Server databases for a Windows installation, you must use an existing account.
      - **Read** permission to the directory from which the installation program is being run.
      - **Log On As a Service** rights and permissions.
      - **Write** permissions to all paths provided during installation for the install folder, log files directory, application files location.
      - **Full Control** permissions to the shared drive for a clustered install (if applicable).
    - **Tomcat Path Configuration**
      Confirm the default path to the shared storage location where log files are to be

stored, or- if necessary - browse to the desired path. Log files track user activities in the VoiceConsole On Prem deployment application.

- **Tomcat Port Configuration**
  Confirm the default ports that the application server uses, or - if necessary - enter different ports.

11. Click the **Database Configuration** tab.
12. Enter the appropriate information for your database.
    a. SQL Server
    For installations using SQL Server, you must enter the information listed in the following table:

> **NOTE**
> SQL Server does not enable TCP/IP by default. You must manually enable TCP/IP before the installation can complete successfully.

- **For Basic**

Field	Description	Valid Entry Format
Database Hostname	DNS name or IP address of the machine hosting the database.	
Database Port	The port that the database uses.	Must be an integer between 1 and 65535. Default is 1433.
Database Name	The name of the database.	

- **For Advanced**

Field	Description	Valid Entry Format
JDBC URL	The JDBC URL for the database.	jdbc:sqlserver://<host>:<port>; DatabaseName=<database name>

- **For Both Basic and Advanced**

Field	Description	Valid Entry Format
Authentication Type (Windows installs only where existing user specified for Tomcat Server configuration)	The authentication type used to connect to the database.	If installing on Windows and an existing user was specified for the Tomcat Service configuration, you can select to use NT Authentication. Otherwise, select SQL Server Authentication.

Field	Description	Valid Entry Format
Database Username	The username that the application should use to log into the database. This is disabled if using NT Authentication.	
Database Password	The password of the user that the application should use to log into the database. This is disabled if using NT Authentication.	
Database Schema	The database schema that you are using.	

b. Oracle
For installations using Oracle, you must enter the following information:

- **For Basic**

Field	Description	Valid Entry Format
Database Hostname	DNS name or IP address of the machine hosting the database.	
Database Port	The port that the database uses.	Must be an integer between 1 and 65535. Default is 1521.
SID or Service Name	The SID or Service Name of the Oracle database.	

- **For Advanced**

Field	Description	Valid Entry Format
JDBC URL	The JDBC URL for the database.	jdbc:oracle:thin:@<host>:<port>:<database name>

- **For Both Basic and Advanced**

Field	Description	Valid Entry Format
Database Username	The username of a user with administrative privileges.	
Database Password	The password of a user with administrative privileges.	

13. Click the **VoiceConsole Configuration** tab.
14. Enter the appropriate information for your VoiceConsole On Prem deployment configuration.

Field	Description
VoiceConsole Hostname	Specify the hostname or IP address of the machine controlling the cluster.
Display Dialog Port	Confirm the default port that the application server uses for the Display Dialog feature.
Enable HTTPS Support	Select to enable secure HTTPS on all pages of VoiceConsole On Prem deployment. Certain pages are still secure if this check box is not selected.
Storage Directory	Confirm the default path to the shared storage location accessible by all cluster nodes where you would like to have application files stored. The storage directory must have enough room to store device logs, which could grow very large in a short amount of time. Additionally, VoiceConsole On Prem deploymentperformance may be negatively affected if the storage directory is on a shared network drive with low throughput. If not required for clustering, Honeywell recommends having this location on a local drive.

15. Click **Install Now**.
    The installation begins. When the first part of the VoiceConsole On Prem deployment installation is successfully completed, click **OK**.
    If installing on Windows, the **Setup Shortcuts** window appears. If installing on Linux, go to step 18.
16. If desired, select the program group in the **Start** menu to place the shortcut within or edit the path of the shortcut. If you do not want a VoiceConsole shortcut on the Start menu, clear the **Create shortcut in the Start menu** checkbox. A shortcut to VoiceConsole On Prem deployment is placed on the desktop automatically after the installation process completes.
17. Click **Next**.
    The installation continues. When the installation is complete, the **Installation Finished** window appears.
18. If desired, click **Generate script** to generate an .xml file with your installation choice data to use for silent or automatic installations.
19. Click **Done**.
    The VoiceConsole Installer closes, and the VoiceConsole On Prem deployment application opens.

Install into Additional Nodes

> NOTE
> If you are installing into an Active/Passive cluster configuration, make sure that the active node has access to shared resources—for example, the log and firmware files location.

1. Run the installer>br />The **Introduction** window appears.
2. Click **Next**.
   The **License Agreement** window appears.

3. Accept the terms of the license agreement, and click **Next**.
   The **Select Installation Path** window appears.
4. Click **Next** to install to the default path or, if necessary, browse to the desired installation path and click **Next.**
   The **Software to Install** window appears.
5. Click **Next**.
   The **Copying Software** window displays the installer progress during the copy of the individual selected software and the entire copying process.
6. When the copying process is finished, click **Next**.
   The **Cluster Configurations** window appears.
7. Select **Yes**, select the directory that you entered in step 9 of Install Into the First Node, and click **Next**.
   The **Configuration and Installation** window contains four tabs to configure your installation.
8. Click the **Tomcat Server Configuration** tab.
9. In the **Tomcat Path Configuration** field, confirm the default path to the shared storage location where log files are stored, or—if necessary—browse to the desired path.
   Fields on the tabs of the **Configuration and Installation** window are populated with installation information entered when you installed VoiceConsole On Prem deployment on the first node. Only the **Tomcat Path Configuration** field can be edited.
10. Click the **Database Configuration** tab and the **VoiceConsole Configuration** tab to verify that the information automatically entered.
11. Click **Install Now**.
    The installation begins. When the first part of the VoiceConsole On Prem deployment installation is successfully completed, click **OK**.
    If installing on Windows, the **Setup Shortcuts** window displays. If installing on Linux, go to step 14.
12. If desired, select the program group in the **Start** menu to place the shortcut within or edit the path of the shortcut. If you do not want a VoiceConsole On Prem deployment shortcut on the **Start** menu, clear the **Create shortcut in the Start menu** checkbox.
13. Click **Next**.
    The installation continues. When the installation is complete, the **Installation Finished** window displays.
14. If desired, click **Generate an automatic installation script** to generate an *.xml* file with your installation choice data to use for silent or automatic installations.
15. Click **Done**.
    The **VoiceConsole Installer** closes, and the VoiceConsole On Prem deployment application opens.

Install the USB Driver

If you are using Microsoft Windows:

- For VoiceConsole On Prem deployment, you may need to install the USB driver located in the VoiceConsole electronic software distribution to use the maintenance port on Honeywell Voice A700, A700x, or A700XP devices. The necessary driver is already installed on Linux systems.

Install the USB Driver on Windows

Once the device is connected to the USB port on a computer running Windows, the necessary USB driver - CDC-ACM driver - should install automatically. If it does not:

1. Open Windows Device Manager.
2. Find and right-click **Talkman USB Serial** in the list of devices.
3. Select **Update Driver Software**, and follow the directions pointing the search to the VoiceConsole electronic software distribution to locate the CDC-ACM driver.

Initial Setup

This image shows an overview of the initial setup in VoiceConsole. This diagram shows only required steps. Optional configurations, such as setting up sites and setting up operator teams are described in detail in VoiceConsoleOnline Help.

> IMPORTANT
> When VoiceConsole 6.2 or later is first accessed it is necessary to visit the Configure License page and select a license option. After a license option is selected, the appropriate license actions are displayed.

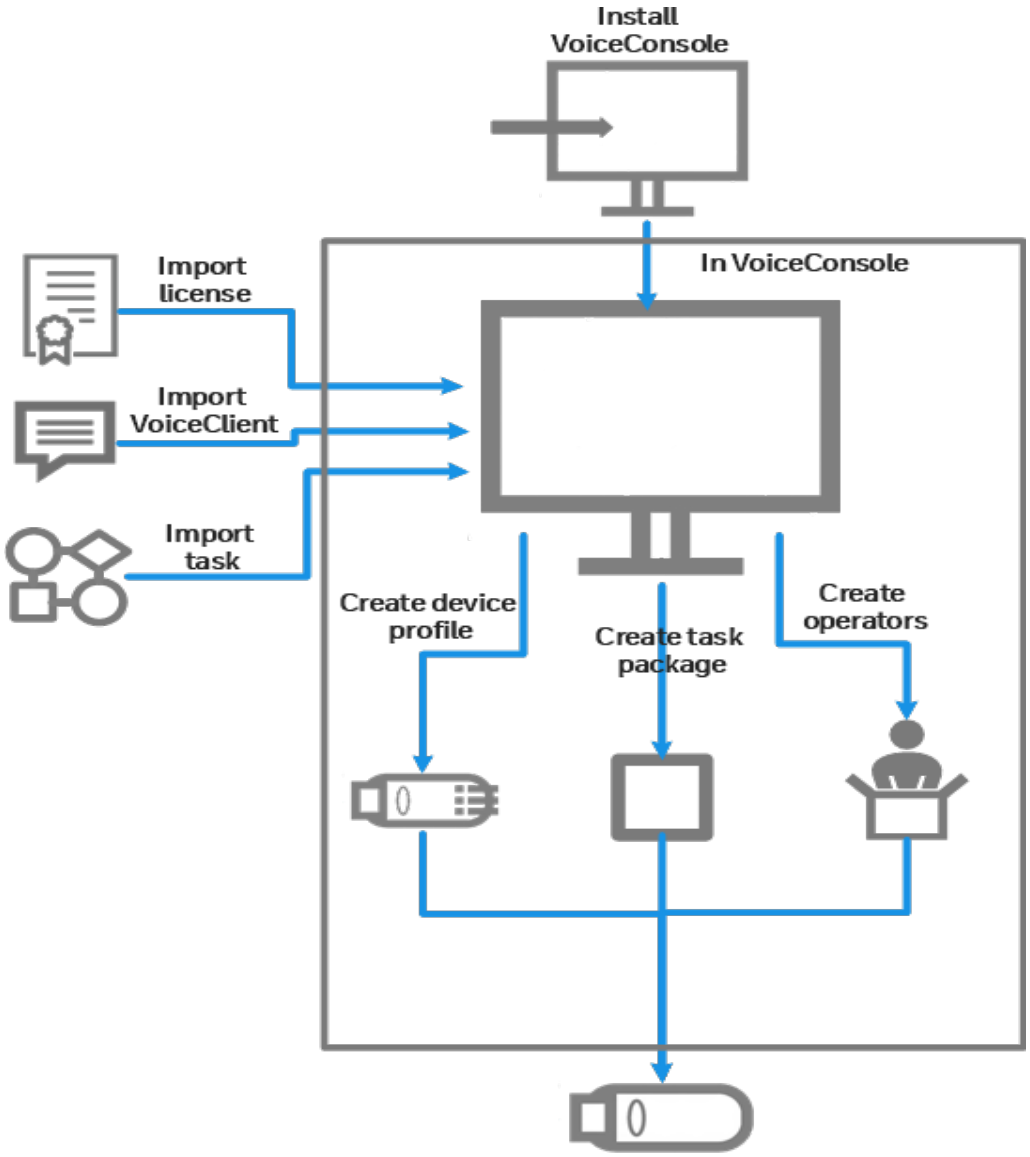

Secure the Database Password

> **NOTE**
> This section applies only to a VoiceConsole On Prem deployment.

Regardless of the database used, the installation program stores the *database.properties* file in the target installation folder. This file includes the database password and username that the application uses to log into the database (unless you are using SQL Server with NT Authentication). To protect the database user, database passwords in this file are encrypted. However, this file is a plain text file that can be read by any text editor. Therefore, if you want to secure this file, follow the appropriate steps to secure it with Windows or Linux file permissions, depending on the operating system that you are using.

Perform a Silent Installation

Prepare for a Silent Installation

> **IMPORTANT**
> To avoid any potential issues, Honeywell highly recommends **against** installing a VoiceConsole On Prem deployment from a shared network drive. The software distribution must be copied to local drive or portable media such as a USB drive prior to install.

- Close all other applications before installing.
- When you install this version of VoiceConsole On Prem deployment for the first time, the following two users are installed with the application with default passwords:

User	Default Password
admin	admin
vocollect	voiceworks

A silent installation or upgrade is available by providing an .xml file with the information that would be provided during a user interface installation. The .xml file is provided as a command line argument to the installer executable, batch, or script file to perform the installation.

Notes on install file formatting

- Line endings must match the requirements of the server operating system in use.
- Property names are case sensitive.
- Property values must not end in whitespace.
- For VoiceConsole 6.2 and later, the License Server Configuration entries must be included in the xml file.

Generate an Install File

You have two options for generating an *.xml* file for a silent installation:

1. Run the installer; choose all the options that you need, and then on the **Installation Finished** window (last window), click **Generate script** to generate the *.xml* file with your installation choices. See Install VoiceConsole for the First Time or Prepare to Upgrade for instructions for installing or upgrading and generating the script.

2. Manually create the *.xml* file. Below are some examples of *.xml* files.

Standard Installation

```
<?xml version="1.0" encoding="UTF-8" standalone="no"?>
<AutomatedInstallation langpack="eng">
<ImagePanel id="UNKNOWN (ImagePanel)"/>
<com.izforge.izpack.panels.HTMLLicencePanel id="licencepanel"/>
<com.izforge.izpack.panels.UpgradePanel id="upgradepanel"/>
<com.izforge.izpack.panels.TargetPanel id="targetpanel">
<!-- This is the suggested installation path for Windows. -->
<!-- <installpath>C:\Program Files (x86)\Vocollect\VoiceConsole</installpath> -->
<!-- This is the suggested installation path for Unix-based operating systems. If using Linux,
remove the Windows installation path above and uncomment this path. -->
<!-- <installpath>/opt/Vocollect/VoiceConsole</installpath> -->
<installpath>C:\Temp\6.6</installpath>
</com.izforge.izpack.panels.TargetPanel>
<com.izforge.izpack.panels.PacksPanel id="packspanel">
<pack index="0" name="application" selected="true"/>
<!-- This is the Windows Java Runtime Environment. -->
<pack index="1" name="jreWindowsx86" selected="true"/>
<!-- These are the other available Java Runtime Environment. If using Linux, remove the Windows
Java Runtime Environment above and uncomment the appropriate pack below. -->
<!-- <pack index="1" name="jreLinux86x" selected="true"/> -->
</com.izforge.izpack.panels.PacksPanel>
<com.izforge.izpack.panels.InstallPanel id="installpanel"/>
<com.izforge.izpack.panels.LegacyUpgradePanel id="legacyupgradepanel"/>
<com.izforge.izpack.panels.RemoteUpgradePanel id="remoteupgradepanel">
<remoteUpgrade>false</remoteUpgrade>
</com.izforge.izpack.panels.RemoteUpgradePanel>
<com.izforge.izpack.panels.ClusterPanel id="clusterpanel">
<clusteredInstall>false</clusteredInstall>
<clusterSharePath/>
</com.izforge.izpack.panels.ClusterPanel>
<com.izforge.izpack.panels.configurator.ConfiguratorPanel id="configuratorPanel">
<configuratorData>
<!-- Configuration fields that need user specified values. -->
<!-- ###EDIT THE CONFIGURATION FIELDS. SEE CHART FOR ALL POSSIBLE FIELDS.### -->
<configuratorProperty configItemNameToModify="07sqlDatabaseSchema">dbo</configuratorProperty>
<configuratorProperty
configItemNameToModify="01voiceConsoleHostname">HOSTNAME</configuratorProperty>
<configuratorProperty configItemNameToModify="01databaseServer">SQL
Server</configuratorProperty>
<configuratorProperty
configItemNameToModify="05sqlDatabaseUsername">USERNAME</configuratorProperty>
<configuratorProperty
```

```
configItemNameToModify="01tomcatLogDirectory">C:\Temp\6.6\logs</configuratorProperty>
<configuratorProperty configItemNameToModify="#date">Oct 9, 20264:19:28
PM</configuratorProperty>
<configuratorProperty configItemNameToModify="testConnection">true</configuratorProperty>
<configuratorProperty
configItemNameToModify="06sqlDatabasePassword">PASSWORD</configuratorProperty>
<configuratorProperty
configItemNameToModify="04voiceConsoleStorageDirectory">C:\Temp\6.6</configuratorProperty>
<configuratorProperty
configItemNameToModify="03sqlDatabaseName">DATABASENAME</configuratorProperty>
<configuratorProperty
configItemNameToModify="01sqlDatabaseHostname">HOSTNAME</configuratorProperty>
<configuratorProperty
configItemNameToModify="06voiceConsoleSamlSSO">false</configuratorProperty>
<configuratorProperty
configItemNameToModify="04flexeraPassword">PASSWORD</configuratorProperty>
<configuratorProperty
configItemNameToModify="04oraDatabaseUsername">USERNAME</configuratorProperty>
</configuratorData>
</com.izforge.izpack.panels.configurator.ConfiguratorPanel>
<com.izforge.izpack.panels.ShortcutPanel id="shortcutpanel">
<!-- ###EDIT SHORTCUT SETTINGS.### -->
<programGroup name="Vocollect\VoiceConsole"/>
<shortcut KdeSubstUID="false" categories="" commandLine="start" createForAll="false"
description="Go to VoiceConsole web application" encoding="" group="true"
icon="C:\Temp\6.6\tools\vocollect_icon.ico" iconIndex="0" initialState="1" mimetype=""
name="VoiceConsole" target="C:\Temp\6.6\bin\WebApplication.url" terminal="" terminalOptions=""
tryexec="" type="1" url="" usertype="0" workingDirectory="C:\Temp\6.6\bin"/>
</com.izforge.izpack.panels.ShortcutPanel>
<com.izforge.izpack.panels.VocollectFinishPanel id="finishpanel"/>
</AutomatedInstallation>
```

Clustered Installation

```
<?xml version="1.0" encoding="UTF-8" standalone="no"?>
<AutomatedInstallation langpack="eng">
<ImagePanel id="UNKNOWN (ImagePanel)"/>
<com.izforge.izpack.panels.HTMLLicencePanel id="licencepanel"/>
<com.izforge.izpack.panels.UpgradePanel id="upgradepanel"/>
<com.izforge.izpack.panels.TargetPanel id="targetpanel">
<!-- Installation Directory -->
<!-- ###EDIT THE INSTALLATION DIRECTORY PATH.### -->
<installpath>C:\Temp\6.6</installpath>
</com.izforge.izpack.panels.TargetPanel>
<com.izforge.izpack.panels.PacksPanel id="packspanel">
<pack index="0" name="application" selected="true"/>
<pack index="1" name="jreWindowsx86" selected="true"/>
```

```
</com.izforge.izpack.panels.PacksPanel>
<com.izforge.izpack.panels.InstallPanel id="installpanel"/>
<com.izforge.izpack.panels.LegacyUpgradePanel id="legacyupgradepanel"/>
<com.izforge.izpack.panels.RemoteUpgradePanel id="remoteupgradepanel">
<remoteUpgrade>false</remoteUpgrade>
</com.izforge.izpack.panels.RemoteUpgradePanel>
<com.izforge.izpack.panels.ClusterPanel id="clusterpanel">
<clusteredInstall>true</clusteredInstall>
<!-- Cluster settings -->
<!-- ###EDIT CLUSTER SETTINGS.### -->
<clusterSharePath>C:\Shared\Vocollect</clusterSharePath>
</com.izforge.izpack.panels.ClusterPanel>
<com.izforge.izpack.panels.configurator.ConfiguratorPanel id="configuratorPanel">
<configuratorData>
<!-- Configuration fields that need user specified values. -->
<!-- ###EDIT THE CONFIGURATION FIELDS. SEE CHART IN NEXT SECTION FOR ALL POSSIBLE FIELDS.### --
>
<configuratorProperty configItemNameToModify="07sqlDatabaseSchema">dbo</configuratorProperty>
<configuratorProperty
configItemNameToModify="01voiceConsoleHostname">HOSTNAME</configuratorProperty>
<configuratorProperty configItemNameToModify="01databaseServer">SQL
Server</configuratorProperty>
<configuratorProperty
configItemNameToModify="05sqlDatabaseUsername">USERNAME</configuratorProperty>
<configuratorProperty
configItemNameToModify="01tomcatLogDirectory">C:\Shared\Vocollect\logs</configuratorProperty>
<configuratorProperty configItemNameToModify="#date">Oct 9, 20264:19:28
PM</configuratorProperty>
<configuratorProperty configItemNameToModify="testConnection">true</configuratorProperty>
<configuratorProperty
configItemNameToModify="06sqlDatabasePassword">PASSWORD</configuratorProperty>
<configuratorProperty
configItemNameToModify="04voiceConsoleStorageDirectory">C:\Shared\Vocollect</configuratorProper
ty>
<configuratorProperty
configItemNameToModify="03sqlDatabaseName">DATABASE</configuratorProperty>
<configuratorProperty
configItemNameToModify="01sqlDatabaseHostname">HOSTNAME</configuratorProperty>
<configuratorProperty
configItemNameToModify="06voiceConsoleSamlSSO">false</configuratorProperty>
<configuratorProperty
configItemNameToModify="04flexeraPassword">PASSWORD</configuratorProperty>
<configuratorProperty
configItemNameToModify="04oraDatabaseUsername">USERNAME</configuratorProperty>
</configuratorData>
</com.izforge.izpack.panels.configurator.ConfiguratorPanel>
```

```
<com.izforge.izpack.panels.ShortcutPanel id="shortcutpanel">
<!-- Start menu shortcut settings -->
<!-- ###EDIT SHORTCUT SETTINGS.### -->
<programGroup name="Vocollect\VoiceConsole"/>
<shortcut KdeSubstUID="false" categories="" commandLine="start" createForAll="false"
description="Go to VoiceConsole web application" encoding="" group="true"
icon="C:\Temp\6.6\tools\vocollect_icon.ico" iconIndex="0" initialState="1" mimetype=""
name="VoiceConsole" target="C:\Temp\6.6\bin\WebApplication.url" terminal="" terminalOptions=""
tryexec="" type="1" url="" usertype="0" workingDirectory="C:\Temp\6.6\bin"/>
</com.izforge.izpack.panels.ShortcutPanel>
<com.izforge.izpack.panels.VocollectFinishPanel id="finishpanel"/>
</AutomatedInstallation>
```

Initiate a Silent Installation

Once the properties file is created and saved in the appropriate location, the user can run the silent installer using one of the following commands.

> **IMPORTANT**
> You must run these commands with Administrator privileges.

- To execute the silent installer on Windows, open the Command prompt, and use one of the following commands:

  ```
  install.exe <xmlFileName>.xml
  ```

  ```
  install.bat <xmlFileName>.xml
  ```

- To execute the silent installer on Linux, run the command:

  ```
  install.sh <xmlFileName>.xml
  ```

Configuration Fields for Silent Installation

Tomcat Server Configuration

00tomcatAccount

Field Description

Type of Tomcat account.

> **NOTE**
> If you want to use NT authentication for SQL Server databases for a Windows installation, you must use an existing account.

Values

- tomcatExisting
- tomcatLocalSystem (Windows) (default)
- tomcatVocollectUser (Unix-based) (default)

Installation Type

All

01tomcatExistingUsername

Field Description

Existing account username.

Installation Type

Tomcat Existing User.

02tomcatExistingPassword

Field Description

Existing account password.

Installation Type

Tomcat Existing User.

01tomcatLogDirectory

Location where log files are stored.

Values

path

Installation Type

All

01tomcatListenPort

Field Description

HTTP Port.

Values

9090 (default)

Installation Type

All

02tomcatSSLPort

Field Description

HTTPS Port.

Values

9443 (default)

Installation Type

All

03tomcatAjpPort

Field Description

AJP Port.

Values

9011 (default)

Installation Type

All

04tomcatShutdownPort

Field Description

Shutdown Port.

Values

9006 (default)

Installation Type

All

Database Configuration

01databaseServer

Field Description

Type of database.

Values

- SQL Server
- Oracle

Installation Type

All.

02databaseSettingsMode

Field Description

Type of setting.

Values

- Basic Settings
- Advanced Settings

Installation Type

SQL / Oracle

01sqlDatabaseHostname

Field Description

DNS name or IP address of the machine hosting the database.

Installation Type

- SQL Server / Oracle
- Basic Settings

01oraDatabaseHostname

Field Description

DNS name or IP address of the machine hosting the database.

Installation Type

- SQL Server / Oracle
- Basic Settings

02sqlDatabasePort

Field Description

The port that the database uses.

Values

- 1433 (SQL default)
- 1521 (Oracle default)

Must be an integer between 1 and 65535.

Installation Type

- SQL Server / Oracle
- Basic Settings

02oraDatabasePort

Field Description

The port that the database uses.

Values

- 1433 (SQL default)
- 1521 (Oracle default)

Must be an integer between 1 and 65535.

Installation Type

- SQL Server / Oracle
- Basic Settings

03sqlDatabaseName

Field Description

The name of the database.

Installation Type

- SQL Server / Oracle
- Basic Settings

03oraDatabaseName

Field Description

The name of the database.

Installation Type

- SQL Server / Oracle
- Basic Settings

01sqlDatabaseJdbcUrl

Field Description

The JDBC URL for the database.

Values

- jdbc:sqlserver://<host>:<port>; DatabaseName=<database name>
- jdbc:oracle:thin:@<host>:<port>:<sid>

Installation Type

- SQL Server / Oracle
- Advanced Settings

01oraDatabaseJdbcUrl

Field Description

The JDBC URL for the database.

Values

- jdbc:sqlserver://<host>:<port>; DatabaseName=<database name>
- jdbc:oracle:thin:@<host>:<port>:<sid>

Installation Type

- SQL Server / Oracle
- Advanced Settings

04sqlDatabaseAuthMode

Field Description

The authentication type used to connect to the database.

Values

- SQL Server Authentication
- NT Authentication

Installation Type

- SQL Server
- Basic Settings

04adv_sqlDatabaseAuthMode

Field Description

The authentication type used to connect to the database.

Values

- SQL Server Authentication
- NT Authentication

Installation Type

- SQL Server
- Advanced Settings

05sqlDatabaseUsername

Field Description

The username that the application should use to log into the database. This is disabled if using NT Authentication.

Values

- SQL Server Authentication
- NT Authentication

Installation Type

- SQL Server / Oracle
- Basic Settings

04oraDatabaseUsername

Field Description

The username that the application should use to log into the database. This is disabled if using NT Authentication.

Values

- SQL Server Authentication
- NT Authentication

Installation Type

- SQL Server / Oracle
- Basic Settings

03adv_sqlDatabaseUsername

Field Description

The username that the application should use to log into the database. This is disabled if using NT Authentication.

Values

- SQL Server Authentication
- NT Authentication

Installation Type

- SQL Server / Oracle
- Advanced Settings

02adv_oraDatabaseUsername

Field Description

The username that the application should use to log into the database. This is disabled if using NT Authentication.

Values

- SQL Server Authentication
- NT Authentication

Installation Type

- SQL Server / Oracle
- Advanced Settings

06sqlDatabasePassword

Field Description

The password of the user that the application should use to log into the database. This is disabled if using NT Authentication.

Installation Type

- SQL Server / Oracle
- Basic Settings

05oraDatabasePassword

Field Description

The password of the user that the application should use to log into the database. This is disabled if using NT Authentication.

Installation Type

- SQL Server / Oracle
- Basic Settings

04adv_sqlDatabasePassword

Field Description

The password of the user that the application should use to log into the database. This is disabled if using NT Authentication.

Installation Type

- SQL Server / Oracle
- Advanced Settings

03adv_oraDatabasePassword

Field Description

The password of the user that the application should use to log into the database. This is disabled if using NT Authentication.

Installation Type

- SQL Server / Oracle
- Advanced Settings

07sqlDatabaseSchema

Field Description

The database schema that you are using.

Installation Type

- SQL Server / Oracle
- Basic Settings

07oraDatabaseSchema

Field Description

The database schema that you are using.

Installation Type

- SQL Server / Oracle
- Basic Settings

05adv_sqlDatabaseSchema

Field Description

The database schema that you are using.

Installation Type

- SQL Server / Oracle
- Advanced Settings

05adv_oraDatabaseSchema

Field Description

The database schema that you are using.

Installation Type

- SQL Server / Oracle
- Advanced Settings

VoiceConsole Configuration

01voiceConsoleHostname

Field Description

Hostname of the machine onto which you are installing.

Installation Type

All

02displayDialogPort

Field Description

Default port that the application server uses for the Display Dialog feature.

Values

9091 (default)

Installation Type

All

03voiceConsoleHTTPSOption

Field Description

Enable secure HTTPS on all pages of the VoiceConsole On Prem deployment. Certain pages are still secure if this check box is not set.

Values

- true
- false

Installation Type

All

04voiceConsoleStorageDirectory

Field Description

Specify where you would like to have application files stored.

Values

path

Installation Type

All

06voiceConsoleSamlSSO

Field Description

Enable SAML Single SignOn (SSO) as part of the VoiceConsole On Prem deployment.

Values

- true
- false (default)

Installation Type

All

> NOTE
> SAML SSO cannot be enabled during an upgrade installation. It can only be enabled during a new installation.

License Server Configuration

02flexeraPort

Field Description

HTTPS port for the Local License Server

Values

- 1443 (default)

Installation Type

All

04flexeraPassword

Field Description

Password for the Local License Server.

Installation Type

All

CHAPTER 7

UPGRADING VOICECONSOLE

Understanding VoiceConsole Versions

VoiceConsole versions are identified by a sequence of three numbers, *major.minor.patch*. The third digit may be omitted when it is zero. Generally:

- **Major** is incremented when there are significant changes in the software, such as new features that are not backward compatible.
- **Minor** is incremented when new minor features or a smaller set of new features is added.
- **Patch** is incremented with every bug fix.

The current VoiceConsole version can be viewed by selecting **Administration** > **About**.

As new VoiceConsole versions are released, Honeywell may end support for older versions. Honeywell communicates version release and support information via product notices (VoiceConsole On Prem deployments). Generally Honeywell maintains support for n-1 versions meaning if the latest release is 6.2 versions 6.1 and later are supported.

> IMPORTANT
> When VoiceConsole 6.2 or later is first accessed it is necessary to visit the Configure License page and select a license option. After a license option is selected, the appropriate license actions are displayed.

Prepare to Upgrade

Review these items before starting to Upgrade VoiceConsole On Prem Deployment.

> IMPORTANT
> Honeywell strongly recommends that you back up the database that you are using for the previous version of VoiceConsole before upgrading to this version.
>
> Honeywell strongly recommends first testing the upgrade in a lab environment prior to upgrading in production. The test environment should contain the most recent snapshot of your production database to provide the most accurate representation for your upgrade test efforts.
>
> To avoid any potential issues, Honeywell highly recommends **against** installing VoiceConsole On Prem deployment from a shared network drive.

IMPORTANT
When VoiceConsole 6.2 or later is first accessed it is necessary to visit the Configure License page and select a license option. After a license option is selected, the appropriate license actions are displayed.

- Close all other applications before installing.
- When upgrading with Windows, you must run the installer as an administrator. When installing with Linux, the installer must be run as root.
- Honeywell has only tested upgrades with supported databases. The installer may prohibit you from upgrading from an unsupported database. If you have questions regarding upgrading from an unsupported environment, please contact Honeywell technical support.
- On Windows, navigate to `install.exe` on the downloaded location to which the files were copied. On Linux, if you are using Intel or AMD architecture, copy the files from the downloaded location, or other source, to your computer and execute the `install.sh` file.

IMPORTANT
When VoiceConsole is updated from version 6.1 or earlier, the upgrade process installs a local licensing server as part of the upgrade.

NOTE
SAML SSO cannot be enabled during an upgrade installation. It can only be enabled during a new installation.

Default Ports

- Ports 9090, 9443, 9010, 9006, and 9091 are used by default by the Apache Tomcat Service for proper startup and shutdown. If these ports are not available, the next available ports are used.
- The Licensing Server uses port 1443. if this port is not available, the next available port is used.
- TERMINAL_TCP_PORT port 21050 must be available.
- UDP port 21055 must be available.

See Available Ports and Protocols for more information on these ports.

Data Agent

NOTE
Operational Acuity is replaced by Honeywell Performance+ for Guided Work.

In previous versions of VoiceConsole, the *Operational Acuity Agent* data agent service could be installed. This service is no longer supported and is no longer installed with VoiceConsole 5.5 or later.

For customers who installed the service and are upgrading to VoiceConsole 5.5 or later, Honeywell recommends either disabling or removing it. Use the service manager (`services.msc`) or applicable Linux service management system to disable it.

To completely remove the service in Windows, run this command in an elevated command prompt:
`sc delete 'opacuity-agent'`.

For Linux, Honeywell recommends consulting with the server's Linux Administrator because of Service Management differences.

Upgrade VoiceConsole On Prem Deployment

To upgrade an existing VoiceConsole On Prem deployment to 6.6, select the appropriate instructions below.

VoiceConsole 6.2

> **IMPORTANT**
> Contact Technical Support for assistance upgrading from VoiceConsole 6.2.

VoiceConsole 4.2 through 6.1 with an Embedded Database

The embedded database is no longer supported. If the upgrade installation is attempted on an earlier version with an embedded database, a warning message is displayed.

To perform the upgrade, follow these steps;

1. Install a database. The following options are recommended to replace the embedded database in deployments with 300 or fewer devices:
   - Microsoft SQL Server 2019 or 2022 Express
   - Oracle Database 21c Express Edition
2. Run the VoiceConsole Database Migrator.
3. Run the installer.
   The **Introduction** window appears.
4. Click **Next**.
   The **License Agreement** window appears.
5. Accept the terms of the license agreement, and click **Next**.
   The **Upgrade VoiceConsole** window appears.

6. Click **Next**.
   The **Copying Software** window displays the installer's progress during the copy of the individual selected software and the entire copying process.
7. When the copying process is finished, click **Next**.
   The **Configuration and Installation** window appears.
8. Fields on the **Tomcat Server Configuration** are populated with previous installation and cannot be changed.
9. The **Database Configuration** tab must be completed with the information for the new Express database option.

   Enter the appropriate information for your database.

   > **NOTE**
   > For Express database installs, the Advanced fields below are not used.

   a. SQL Server
      For more information on using a SQL Server Express database with VoiceConsole, see Microsoft SQL Server 2019 or 2022 Express.
      For installations using SQL Server, you must enter the information listed in the following table:

      > **NOTE**
      > SQL Server does not enable TCP/IP by default. You must manually enable TCP/IP before the installation can complete successfully.

      - **For Basic**

Field	Description	Valid Entry Format
Database Hostname	DNS name or IP address of the machine hosting the database.	
Database Port	The port that the database uses.	Must be an integer between 1 and 65535. Default is 1433.
Database Name	The name of the database.	

      - **For Advanced**

Field	Description	Valid Entry Format
JDBC URL	The JDBC URL for the database.	jdbc:sqlserver://<host>:<port>;DatabaseName=<database name>

      - **For Both Basic and Advanced**

Field	Description	Valid Entry Format
Authentication Type (Windows installs only where existing user specified for Tomcat Server configuration)	The authentication type used to connect to the database.	If installing on Windows and an existing user was specified for the Tomcat Service configuration, you can select to use NT Authentication. Otherwise, select SQL Server Authentication.
Database Username	The username that the application should use to log into the database. This is disabled if using NT Authentication.	
Database Password	The password of the user that the application should use to log into the database. This is disabled if using NT Authentication.	
Database Schema	The database schema that you are using.	

b. Oracle
For more information on using an Oracle Express database with VoiceConsole, see Oracle Database 21c Express Edition.
For installations using Oracle, you must enter the following information:

- **For Basic**

Field	Description	Valid Entry Format
Database Hostname	DNS name or IP address of the machine hosting the database.	
Database Port	The port that the database uses.	Must be an integer between 1 and 65535. Default is 1521.
SID or Service Name	The SID or Service Name of the Oracle database.	

- **For Advanced**

Field	Description	Valid Entry Format
JDBC URL	The JDBC URL for the database.	jdbc:oracle:thin:@<host>:<port>:<database name>

- **For Both Basic and Advanced**

Field	Description	Valid Entry Format
Database Username	The username of a user with administrative privileges.	
Database Password	The password of a user with administrative privileges.	

10. Fields on the **VoiceConsole Configuration** tab are populated with previous installation and fields cannot be changed except the **Enable HTTPS support** checkbox can be edited.
11. The **License Server Configuration** tab is new and must be completed.

    Enter the appropriate information for the VoiceConsole On Prem deployment to enable the local licensing server:

    a. **Port:** The port to be used by the license server. The default is **1443**.

    b. **Password:** Enter the password for the local license server.
12. Click **Install Now**.
    The installation begins. When the first part of the VoiceConsoleOn Prem deployment installation is successfully completed, click **OK**.
    If installing on Windows, the **Setup Shortcuts** window appears. If installing on Linux, go to step 9.
13. If desired, select the program group in the **Start** menu to place the shortcut within or edit the path of the shortcut. If you do not want a VoiceConsole shortcut on the **Start** menu, clear the **Create shortcut in the Start menu** checkbox. A shortcut to VoiceConsoleOn Prem deployment is placed on the desktop automatically after the upgrade process completes.
14. Click **Next**.
    The upgrade continues. When the upgrade is complete, the **Installation Finished** window appears.
15. If desired, click **Generate an automatic installation script** to generate an .xml file with your installation choice data to use for silent or automatic installations.
16. Click **Done**.
    The **VoiceConsole Installer** closes, and the VoiceConsoleOn Prem deployment application opens.

VoiceConsole 4.2 through 6.1 with an External Database

1. Run the installer.
   The **Introduction** window appears.
2. Click **Next**.
   The **License Agreement** window appears.
3. Accept the terms of the license agreement, and click **Next**.
   The **Upgrade VoiceConsole** window appears.

4. Click **Next**.
   The **Copying Software** window displays the installer's progress during the copy of the individual selected software and the entire copying process.
5. When the copying process is finished, click **Next**.
   The **Configuration and Installation** window appears.
6. Fields on the **Tomcat Server Configuration** and **Database Configuration** tabs are populated with previous installation and cannot be changed.
7. Fields on the **VoiceConsole Configuration** tab are populated with previous installation and fields cannot be changed except the **Enable HTTPS support** checkbox can be edited.
8. The **License Server Configuration** tab is new and must be completed.

   Enter the appropriate information for the VoiceConsole On Prem deployment to enable the local licensing server:

   a. **Port:** The port to be used by the license server. The default is **1443**.

   b. **Password:** Enter the password for the local license server.
9. Click **Install Now**.
   The installation begins. When the first part of the VoiceConsoleOn Prem deployment installation is successfully completed, click **OK**.
   If installing on Windows, the **Setup Shortcuts** window appears. If installing on Linux, go to step 9.
10. If desired, select the program group in the **Start** menu to place the shortcut within or edit the path of the shortcut. If you do not want a VoiceConsole shortcut on the **Start** menu, clear the **Create shortcut in the Start menu** checkbox. A shortcut to VoiceConsoleOn Prem deployment is placed on the desktop automatically after the upgrade process completes.
11. Click **Next**.
    The upgrade continues. When the upgrade is complete, the **Installation Finished** window appears.
12. If desired, click **Generate an automatic installation script** to generate an .xml file with your installation choice data to use for silent or automatic installations.
13. Click **Done**.
    The **VoiceConsole Installer** closes, and the VoiceConsoleOn Prem deployment application opens.

VoiceConsole Earlier than 4.2

> IMPORTANT
> Contact Technical Support for assistance before upgrading from VoiceConsole earlier than 4.2. Additional files and instruction are required to complete this upgrade.

Upgrade from an Existing Installation on a Different Computer

> **NOTE**
> If you plan on upgrading your database, you must upgrade it before performing a remote upgrade to VoiceConsole.

> **IMPORTANT**
> Before beginning the installation, stop the VoiceConsole service on the computer from which you are installing. Failure to do so may result in corrupt data in your new installation.

> **NOTE**
> Locations specified throughout this procedure must be shared by the computers containing the existing installation and the location of the new installation.

For an HTTPS installation:

- If you are performing a remote upgrade where HTTPS is enabled in the original installation, you must disable HTTPS, perform the remote upgrade, then enable HTTPS. See Create and Install a Certificate for HTTPS.

If the existing location is using an embedded database on a version of VoiceConsole earlier than 6.2, use the VoiceConsole Database Migrator to transfer the data to one of the supported Express databases prior to completing the instructions below.

1. Shut down the existing installation of VoiceConsole.
2. Run the installer.
   The **Introduction** window appears.
3. Click **Next**.
   The **License Agreement** window appears.
4. Accept the terms of the license agreement, and click **Next**.
   The **Select Installation Path** window appears.
5. Click **Next** to install to the default path or, if necessary, browse to the desired installation path and click **Next.**
   The **Software to Install** window appears.
6. Click **Next**.
   The **Copying Software** window displays the installer progress during the copy of the individual selected software and the entire copying process.
7. When the copying process is finished, click **Next**.
   The **Remote Upgrade** window appears.
8. Select **Yes**.

9. Enter the directory information, and click **Next**.
   The remote storage directory must contain the Device Logs and Files folders. If the default folders were used in the existing installation (4.2 and later), the remote installation directory and the remote storage directory are the same.
   The **Configuration and Installation** window displays tabs to configure your installation.
10. Click the **Tomcat Server Configuration** tab.
11. Enter the appropriate information for your Tomcat server configuration.
    a. **Tomcat Login Information**
       Choose an account, and enter the account username and password, if necessary.
       In Windows, if you select **Use Existing Account**, ensure that the account entered has the necessary permission described below:

       > NOTE
       > If you want to use NT authentication for SQL Server databases for a Windows installation, you must use an existing account.

       > IMPORTANT
       > When using an existing account, set the permissions for starting the Tomcat service. Access \Domain\Users\ to enable the logon for the particular user group and to set permissions.

       - **Read** permission to the directory from which the installation program is being run
       - **Log On As a Service** rights and permissions (refer to Tomcat documentation for setup information).
       - **Write** permissions to all paths provided during installation for the install folder, log files directory, application files location
       - **Write** permissions to the shared drive for a clustered install (if applicable)

    b. **Tomcat Path Configuration**
       Confirm the default path to the location where the log files are to be stored, or - if necessary - browse to the desired path. Log files track user activities in the VoiceConsole On Prem deployment application.

    c. **Tomcat Port Configuration**
       Confirm the default ports that the application server uses, or - if necessary - enter different ports.
12. Click the **Database Configuration** tab.
13. Enter the appropriate information for your database.

> **NOTE**
> For Express database installs, the Advanced fields below are not used.

a. SQL Server
For more information on using a SQL Server Express database with VoiceConsole, see Microsoft SQL Server 2019 or 2022 Express.
For installations using SQL Server, you must enter the information listed in the following table:

> **NOTE**
> SQL Server does not enable TCP/IP by default. You must manually enable TCP/IP before the installation can complete successfully.

- **For Basic**

Field	Description	Valid Entry Format
Database Hostname	DNS name or IP address of the machine hosting the database.	
Database Port	The port that the database uses.	Must be an integer between 1 and 65535. Default is 1433.
Database Name	The name of the database.	

- **For Advanced**

Field	Description	Valid Entry Format
JDBC URL	The JDBC URL for the database.	jdbc:sqlserver://<host>:<port>; DatabaseName=<database name>

- **For Both Basic and Advanced**

Field	Description	Valid Entry Format
Authentication Type (Windows installs only where existing user specified for Tomcat Server configuration)	The authentication type used to connect to the database.	If installing on Windows and an existing user was specified for the Tomcat Service configuration, you can select to use NT Authentication. Otherwise, select SQL Server Authentication.

Field	Description	Valid Entry Format
Database Username	The username that the application should use to log into the database. This is disabled if using NT Authentication.	
Database Password	The password of the user that the application should use to log into the database. This is disabled if using NT Authentication.	
Database Schema	The database schema that you are using.	

b. Oracle
For more information on using an Oracle Express database with VoiceConsole, see Oracle Database 21c Express Edition.
For installations using Oracle, you must enter the following information:

- **For Basic**

Field	Description	Valid Entry Format
Database Hostname	DNS name or IP address of the machine hosting the database.	
Database Port	The port that the database uses.	Must be an integer between 1 and 65535. Default is 1521.
SID or Service Name	The SID or Service Name of the Oracle database.	

- **For Advanced**

Field	Description	Valid Entry Format
JDBC URL	The JDBC URL for the database.	jdbc:oracle:thin:@<host>:<port>:<database name>

- **For Both Basic and Advanced**

Field	Description	Valid Entry Format
Database Username	The username of a user with administrative privileges.	
Database Password	The password of a user with administrative privileges.	

14. Click the **VoiceConsole Configuration** tab.

15. Enter the appropriate information for your VoiceConsole On Prem deployment configuration.

    - **VoiceConsole Hostname**
      Specify the hostname of the machine onto which you are installing VoiceConsole On Prem deployment.
    - **Display Dialog Port**
      Confirm the default port that the application server uses for the Display Dialog feature.
    - **Enable HTTPS Support**
      Select to enable secure HTTPS on all pages of VoiceConsole On Prem deployment. Certain pages are still secure if this check box is not selected.
    - **Storage Directory**
      Specify where you would like to have application files stored.
      The storage directory must have enough room to store device logs, which could grow very large in a short amount of time. Additionally, VoiceConsole On Prem deployment performance may be negatively affected if the storage directory is on a shared network drive with low throughput. If not required for clustering, Honeywell recommends having this location on a local drive.
    - **Enable SAML SSO**
      Check to enable Federation SAML (Security Assertion Markup Language) Single Sign On.Additional configuration is necessary to use this feature after the installation is completed.

      > **NOTE**
      > SAML SSO cannot be enabled during an upgrade installation. It can only be enabled during a new installation.

16. Click the **License Server Configuration** tab.
17. Enter the appropriate information for the VoiceConsole On Prem deployment to enable the local licensing server:
    a. **Port:** The port to be used by the license server. The default is **1443**.
    b. **Password:** Enter the password for the local license server.
18. Click **Install Now.**
    The installation begins. When the first part of the VoiceConsole On Prem deployment installation is successfully completed, click **OK**.
    If installing on Windows, the **Setup Shortcuts** window appears. If installing on Linux, go to step 21.
19. If desired, select the program group in the **Start** menu to place the shortcut within or edit the path of the shortcut. If you do not want a VoiceConsole shortcut on the **Start** menu, clear the **Create shortcut in the Start menu** checkbox. A shortcut to VoiceConsole is placed on the desktop automatically after the upgrade process completes.

20. Click **Next**.
    The upgrade continues. When the upgrade is complete, the **Installation Finished** window appears.
21. If desired, click **Generate an automatic installation script** to generate an .xml file with your installation choice data to use for silent or automatic installations.
22. Click **Done**.
    The VoiceConsole Installer closes, and the VoiceConsole On Prem deployment application opens.

Migrate the Devices to the New Computer

After installing VoiceConsole On Prem deployment, you need to configure the devices to point to the new server. Follow these steps:

1. Change the hostname of the original instance of VoiceConsole to the hostname specified in Step 9 in Upgrade from an Existing Installation on a Different Computer. If the original instance is a 3.0 or newer VoiceConsole installation, change the hostname in **Device Management > Device Profiles > Edit hostname for all profiles.**
2. In the original instance of VoiceConsole, reload device profiles to selected devices that are to use VoiceConsole On Prem deployment 6.6. See the **VoiceConsole Online Help** for that version of VoiceConsole for more information.

These devices can now be used with the new installation.

Upgrade in a Clustered Environment

> IMPORTANT
> When installing or upgrading in a clustered environment, contact Honeywell for assistance with licensing.

These procedures are for upgrading from VoiceConsole 4.2 and newer in a clustered environment to VoiceConsole On Prem deployment 6.6 in a clustered environment.

> IMPORTANT
> Contact Technical Support for assistance before upgrading from VoiceConsole earlier than 4.2. Additional files and instruction are required to complete this upgrade.

- You can only upgrade to VoiceConsole 6.6 in a clustered environment from VoiceConsole 4.2 or newer.
- If you are installing into an Active/Passive cluster configuration, make sure that the active node has access to shared resources - for example, the log and firmware files location.
- You must delete the cluster resource associated with the `VocollectWebApplicationsVC` service prior to initiating the upgrade. After the upgrade is complete on all nodes, add the

cluster resource again to prevent application irregularities and failures because the cluster manager interferes with the upgrade process. During the upgrade, the installer stops the `VocollectWebApplicationsVC` service then attempts to delete and recreate it. With a clustered service, however, the cluster manager attempts to restart the service, causing the web service to restart; then it prevents the installer from deleting the service.

Upgrade from an Existing VoiceConsole Cluster Installation to VoiceConsole 6.6 in a Fail-Over Clustered Environment

1. Stop the VoiceConsole service on all nodes.
2. On the active node, upgrade VoiceConsole to VoiceConsole 6.6.
3. Failover by shutting down the cluster service on the currently active node.

   The other cluster node becomes active.
4. On the new active node, upgrade VoiceConsole to VoiceConsole 6.6.
5. Repeat steps 3 and 4 for all nodes in the cluster.
6. Restart your computer.
7. Restart the cluster.

Upgrade from an Existing VoiceConsole Cluster Installation to VoiceConsole 6.6 in a Load Balancing Clustered Environment

1. On the first node, upgrade VoiceConsole to VoiceConsole 6.6.
2. Repeat step 1 for all nodes in the cluster.

Migrate from One Database to Another

> **IMPORTANT**
> If you are migrating from a previous version of VoiceConsole, Honeywell strongly recommends that you back up the database that you are using for the previous version before upgrading to this version of VoiceConsole.

By performing the steps below, you can migrate from one database to another and keep existing operators and tasks; but devices, device profiles, task packages, and voice process software must be created/imported in the VoiceConsole On Prem deployment on the new database.

Contact your Honeywell representative about services offered to support migration between databases that allow you to keep all your existing information and automate this process below.

- The process below is for VoiceConsole 3.0 and newer. For migration on prior versions of VoiceConsole, contact your Honeywell representative.
- Honeywell recommends exporting operators in small groups of less than 100 if you have a large number in your system.

- Honeywell recommends downloading tasks in small groups of less than 100 if you have a large number in your system.

1. Within each site, if applicable, export all operators and templates from your VoiceConsole system by selecting **Move Operators** > **Export all operators** under **Operator Actions** on the View Operators page in your currently installed VoiceConsole system.
2. Download all tasks from your VoiceConsole system by selecting every task row on the **View Tasks** page, and selecting the **Download selected task** action under **Task Actions** in your currently installed system.
3. Install the new, supported database.
4. Install VoiceConsole.
5. If necessary, create sites in the new installation of VoiceConsole.
6. Within each site, if applicable, import the operators you exported in step 1 by selecting **Move Operators** > **Import operators** under **Operator Actions** on the **View Operators** page, and selecting the appropriate .zip file. Repeat this step for each .zip file that you exported in step 1.
7. Import the tasks that you downloaded in step 2 by selecting **Import Task** under **Task Actions** on the **View Tasks** page, and selecting the appropriate .zip file. If applicable, indicate the site into which the imported tasks should go. Repeat this step for each .zip file that you exported in step 2.
8. For each site, if applicable, connect devices, import your process software, and create task packages and device profiles in VoiceConsole on the new database.

Perform a Silent Upgrade

Prepare for Silent Upgrade

> IMPORTANT
> To avoid any potential issues, Honeywell highly recommends **against** installing a VoiceConsole On Prem deployment from a shared network drive. The software distribution must be copied to local drive or portable media such as a USB drive prior to install.

- Close all other applications before installing.
- When you install this version of VoiceConsole On Prem deployment for the first time, the following two users are installed with the application with default passwords:

User	Default Password
admin	admin

User	Default Password
vocollect	voiceworks

A silent installation or upgrade is available by providing an .xml file with the information that would be provided during a user interface installation. The .xml file is provided as a command line argument to the installer executable, batch, or script file to perform the installation.

> **IMPORTANT**
> If you performed a silent install of VoiceConsole version 3.0 or 3.0.1 in a Linux or Unix environment and now want to run a silent upgrade, you have to reset directory permissions after the upgrade is complete.
> As root user, stop the VoiceConsole service. Reset the installation directory ownership to the expected user account using the `chown` command with the recursive switch, then restart the service. For example:
> `chown -R vocollect /opt/Vocollect/VoiceConsole`

Notes on install file formatting

- Line endings must match the requirements of the server operating system in use.
- Property names are case sensitive.
- Property values must not end in whitespace.
- For VoiceConsole 6.2 and later, the License Server Configuration entries must be included in the xml file.

Perform a Silent Upgrade from VoiceConsole Earlier than 4.2

> **IMPORTANT**
> Contact Technical Support for assistance before upgrading from VoiceConsole earlier than 4.2. Additional files and instruction are required to complete this upgrade.

Perform a Silent Upgrade from VoiceConsole 4.2 or Later With an External Database

> **WARNING**
> Honeywell strongly recommends that you back up the database that you are using for the previous version of VoiceConsole before upgrading to this version.

> **WARNING**
> Honeywell strongly recommends first testing the upgrade in a lab environment prior to

upgrading in production. The test environment should contain the most recent snapshot of your production database to provide the most accurate representation for your upgrade test efforts.

NOTE
If you are upgrading in Windows with an existing Tomcat user, ensure that the account used has the necessary permission described below.

- **Read** permission to the directory from which the installation program is being run.
- **Log On As a Service** rights and permissions.
- **Write** permissions to all paths provided during installation for the install folder, log files directory, application files location
- **Write** permissions to the shared drive for a clustered install (if applicable)

You have two options for generating an .xml file:

1. Run the installer, choose all the options that you need, and then on the **Installation Finished** window (last window), click **Generate an automatic installation script** to generate the .xml file with your installation choice data. See Install VoiceConsole for the First Time or Prepare to Upgrade for instructions for installing or upgrading and generating the script.
2. Manually create the .xml file. Below are some examples of .xml files.

Standard upgrade

```
<?xml version="1.0" encoding="UTF-8" standalone="no"?>
<AutomatedInstallation langpack="eng">
<ImagePanel id="UNKNOWN (ImagePanel)"/>
<com.izforge.izpack.panels.HTMLLicencePanel id="licencepanel"/>
<com.izforge.izpack.panels.UpgradePanel id="upgradepanel"/>
<com.izforge.izpack.panels.TargetPanel id="targetpanel">
</com.izforge.izpack.panels.TargetPanel>
<com.izforge.izpack.panels.PacksPanel id="packspanel">
<pack index="0" name="application" selected="true"/>
<pack index="1" name="jreWindowsx86" selected="true"/>
</com.izforge.izpack.panels.PacksPanel>
<com.izforge.izpack.panels.InstallPanel id="installpanel"/>
<com.izforge.izpack.panels.LegacyUpgradePanel id="legacyupgradepanel"/>
<com.izforge.izpack.panels.ClusterPanel id="clusterpanel">
</com.izforge.izpack.panels.ClusterPanel>
<com.izforge.izpack.panels.configurator.ConfiguratorPanel id="configuratorPanel">
<configuratorData>
<configuratorProperty configItemNameToModify="01voiceConsoleHostname">HOSTNAME</configuratorProperty>
<configuratorProperty configItemNameToModify="01tomcatLogDirectory">C:\Program Files (x86)\Vo-
collect\VoiceConsole\logs</configuratorProperty>
<configuratorProperty configItemNameToModify="04voiceConsoleStorageDirectory">C:\Program Files
(x86)\Vocollect\VoiceConsole</configuratorProperty>
<configuratorProperty configItemNameToModify="03voiceConsoleHTTPSOption">true</configuratorProperty>
<configuratorProperty configItemNameToModify="06voiceConsoleSamlSSO">false</configuratorProperty>
```

```
<configuratorProperty configItemNameToModify="04flexeraPassword">PASSWORD</configuratorProperty>
<configuratorProperty configItemNameToModify="04oraDatabaseUsername">USERNAME</configuratorProperty>
</configuratorData>
</com.izforge.izpack.panels.configurator.ConfiguratorPanel>
<com.izforge.izpack.panels.ShortcutPanel id="shortcutpanel"/>
<com.izforge.izpack.panels.VocollectFinishPanel id="finishpanel"/>
</AutomatedInstallation>
```

Perform a Silent Upgrade from an Existing Installation on a Different Computer

You have two options for generating an .xml file:

1. Run the installer, choose all the options that you need, and then on the **Installation Finished** window (last window), click **Generate an automatic installation script** to generate the .xml file with your installation choice data. See Install VoiceConsole for the First Time or Prepare to Upgrade for instructions for installing or upgrading and generating the script.

2. Manually create the .xml file. Below is an example of an .xml file.

```
<?xml version="1.0" encoding="UTF-8" standalone="no"?>
<AutomatedInstallation langpack="eng">
<ImagePanel id="UNKNOWN (ImagePanel)"/>
<com.izforge.izpack.panels.HTMLLicencePanel id="licencepanel"/>
<com.izforge.izpack.panels.UpgradePanel id="upgradepanel"/>
<com.izforge.izpack.panels.TargetPanel id="targetpanel">
<!-- This is the suggested installation path for Windows. -->
<!-- <installpath>C:\Program Files (x86)\Vocollect\VoiceConsole</installpath> -->
<!-- This is the suggested installation path for Linux-based operating systems. If using Linux,
remove the Windows installation path above and uncomment this path. -->
<!-- <installpath>/opt/Vocollect/VoiceConsole</installpath> -->
<installpath>C:\Temp\6.6</installpath>
</com.izforge.izpack.panels.TargetPanel>
<com.izforge.izpack.panels.PacksPanel id="packspanel">
<pack index="0" name="application" selected="true"/>
<!-- This is the Windows Java Runtime Environment. -->
<pack index="1" name="jreWindowsx86" selected="true"/>
<!-- This is the Linux Java Runtime Environment. If using Linux, remove the Windows Java
Runtime Environment above and uncomment this pack. -->
<!-- <pack index="1" name="jreLinux86x" selected="true"/> -->
</com.izforge.izpack.panels.PacksPanel>
<com.izforge.izpack.panels.InstallPanel id="installpanel"/>
<com.izforge.izpack.panels.LegacyUpgradePanel id="legacyupgradepanel"/>
<com.izforge.izpack.panels.RemoteUpgradePanel id="remoteupgradepanel">
<remoteUpgrade>true</remoteUpgrade>
<remoteInstallationPath>\\remoteServerHostName\VoiceConsole</remoteInstallationPath>
<remoteStoragePath>>\\remoteServerHostName\VoiceConsole</remoteStoragePath>
</com.izforge.izpack.panels.RemoteUpgradePanel>
<com.izforge.izpack.panels.ClusterPanel id="clusterpanel">
```

```
<clusteredInstall>false</clusteredInstall>
<clusterSharePath/>
</com.izforge.izpack.panels.ClusterPanel>
<com.izforge.izpack.panels.configurator.ConfiguratorPanel id="configuratorPanel">
<configuratorData>
<!-- Configuration fields that need user specified values. -->
<!-- ###EDIT THE CONFIGURATION FIELDS. SEE CHART FOR ALL POSSIBLE FIELDS.### -->
<configuratorProperty configItemNameToModify="07sqlDatabaseSchema">dbo</configuratorProperty>
<configuratorProperty
configItemNameToModify="01voiceConsoleHostname">HOSTNAME</configuratorProperty>
<configuratorProperty configItemNameToModify="01databaseServer">SQL
Server</configuratorProperty>
<configuratorProperty
configItemNameToModify="05sqlDatabaseUsername">USERNAME</configuratorProperty>
<configuratorProperty
configItemNameToModify="01tomcatLogDirectory">C:\Temp\6.6\logs</configuratorProperty>
<configuratorProperty configItemNameToModify="#date">Oct 9, 2026 4:19:29
PM</configuratorProperty>
<configuratorProperty configItemNameToModify="testConnection">true</configuratorProperty>
<configuratorProperty
configItemNameToModify="06sqlDatabasePassword">PASSWORD</configuratorProperty>
<configuratorProperty
configItemNameToModify="04voiceConsoleStorageDirectory">C:\Temp\6.6</configuratorProperty>
<configuratorProperty
configItemNameToModify="03sqlDatabaseName">DATABASENAME</configuratorProperty>
<configuratorProperty
configItemNameToModify="01sqlDatabaseHostname">QQLHOSTNAME</configuratorProperty>
<configuratorProperty
configItemNameToModify="06voiceConsoleSamlSSO">false</configuratorProperty>
<configuratorProperty
configItemNameToModify="04flexeraPassword">PASSWORD</configuratorProperty>
<configuratorProperty
configItemNameToModify="04oraDatabaseUsername">USERNAME</configuratorProperty>
</configuratorData>
</com.izforge.izpack.panels.configurator.ConfiguratorPanel>
<com.izforge.izpack.panels.ShortcutPanel id="shortcutpanel">
<!-- ###EDIT SHORTCUT SETTINGS.### -->
<programGroup name="Vocollect\VoiceConsole"/>
<shortcut KdeSubstUID="false" categories="" commandLine="start" createForAll="false"
description="Go to VoiceConsole web application" encoding="" group="true"
icon="C:\Temp\6.6\tools\vocollect_icon.ico" iconIndex="0" initialState="1" mimetype=""
name="VoiceConsole" target="C:\Temp\6.6\bin\WebApplication.url" terminal="" terminalOptions=""
tryexec="" type="1" url="" usertype="0" workingDirectory="C:\Temp\6.6\bin"/>
</com.izforge.izpack.panels.ShortcutPanel>
<com.izforge.izpack.panels.VocollectFinishPanel id="finishpanel"/>
</AutomatedInstallation>
```

Initiate a Silent Upgrade

Once the properties file is created and saved in the appropriate location, the user can run the silent installer using one of the following commands.

> **IMPORTANT**
> You must run these commands with Administrator privileges.

- To execute the silent installer on Windows, open the Command prompt, and enter one of the following commands:

```
install.exe xmlFileName.xml
install.bat xmlFileName.xml
```

- To execute the silent installer on Linux, run the command:

```
install.sh <xmlFileName>.xml
```

Configuration Fields for Silent Upgrade

Tomcat Server Configuration

00tomcatAccount

Field Description

Type of Tomcat account.

> **NOTE**
> If you want to use NT authentication for SQL Server databases for a Windows installation, you must use an existing account.

Values

- tomcatExisting
- tomcatLocalSystem (Windows) (default)
- tomcatVocollectUser (Unix-based) (default)

Installation Type

All

01tomcatExistingUsername

Field Description

Existing account username.

Installation Type

Tomcat Existing User.

02tomcatExistingPassword

Field Description

Existing account password.

Installation Type

Tomcat Existing User.

01tomcatLogDirectory

Location where log files are stored.

Values

path

Installation Type

All

01tomcatListenPort

Field Description

HTTP Port.

Values

9090 (default)

Installation Type

All

02tomcatSSLPort

Field Description

HTTPS Port.

Values

9443 (default)

Installation Type

All

03tomcatAjpPort

Field Description

AJP Port.

Values

9011 (default)

Installation Type

All

04tomcatShutdownPort

Field Description

Shutdown Port.

Values

9006 (default)

Installation Type

All

Database Configuration

01databaseServer

Field Description

Type of database.

Values

- SQL Server
- Oracle

Installation Type

All.

02databaseSettingsMode

Field Description

Type of setting.

Values

- Basic Settings
- Advanced Settings

Installation Type

SQL / Oracle

01sqlDatabaseHostname

Field Description

DNS name or IP address of the machine hosting the database.

Installation Type

- SQL Server / Oracle
- Basic Settings

01oraDatabaseHostname

Field Description

DNS name or IP address of the machine hosting the database.

Installation Type

- SQL Server / Oracle
- Basic Settings

02sqlDatabasePort

Field Description

The port that the database uses.

Values

- 1433 (SQL default)
- 1521 (Oracle default)

Must be an integer between 1 and 65535.

Installation Type

- SQL Server / Oracle
- Basic Settings

02oraDatabasePort

Field Description

The port that the database uses.

Values

- 1433 (SQL default)
- 1521 (Oracle default)

Must be an integer between 1 and 65535.

Installation Type

- SQL Server / Oracle
- Basic Settings

03sqlDatabaseName

Field Description

The name of the database.

Installation Type

- SQL Server / Oracle
- Basic Settings

03oraDatabaseName

Field Description

The name of the database.

Installation Type

- SQL Server / Oracle
- Basic Settings

01sqlDatabaseJdbcUrl

Field Description

The JDBC URL for the database.

Values

- jdbc:sqlserver://<host>:<port>; DatabaseName=<database name>
- jdbc:oracle:thin:@<host>:<port>:<sid>

Installation Type

- SQL Server / Oracle
- Advanced Settings

01oraDatabaseJdbcUrl

Field Description

The JDBC URL for the database.

Values

- jdbc:sqlserver://<host>:<port>; DatabaseName=<database name>
- jdbc:oracle:thin:@<host>:<port>:<sid>

Installation Type

- SQL Server / Oracle
- Advanced Settings

04sqlDatabaseAuthMode

Field Description

The authentication type used to connect to the database.

Values

- SQL Server Authentication
- NT Authentication

Installation Type

- SQL Server
- Basic Settings

04adv_sqlDatabaseAuthMode

Field Description

The authentication type used to connect to the database.

Values

- SQL Server Authentication
- NT Authentication

Installation Type

- SQL Server
- Advanced Settings

05sqlDatabaseUsername

Field Description

The username that the application should use to log into the database. This is disabled if using NT Authentication.

Values

- SQL Server Authentication
- NT Authentication

Installation Type

- SQL Server / Oracle
- Basic Settings

04oraDatabaseUsername

Field Description

The username that the application should use to log into the database. This is disabled if using NT Authentication.

Values

- SQL Server Authentication
- NT Authentication

Installation Type

- SQL Server / Oracle
- Basic Settings

03adv_sqlDatabaseUsername

Field Description

The username that the application should use to log into the database. This is disabled if using NT Authentication.

Values

- SQL Server Authentication
- NT Authentication

Installation Type

- SQL Server / Oracle
- Advanced Settings

02adv_oraDatabaseUsername

Field Description

The username that the application should use to log into the database. This is disabled if using NT Authentication.

Values

- SQL Server Authentication
- NT Authentication

Installation Type

- SQL Server / Oracle
- Advanced Settings

06sqlDatabasePassword

Field Description

The password of the user that the application should use to log into the database. This is disabled if using NT Authentication.

Installation Type

- SQL Server / Oracle
- Basic Settings

05oraDatabasePassword

Field Description

The password of the user that the application should use to log into the database. This is disabled if using NT Authentication.

Installation Type

- SQL Server / Oracle
- Basic Settings

04adv_sqlDatabasePassword

Field Description

The password of the user that the application should use to log into the database. This is disabled if using NT Authentication.

Installation Type

- SQL Server / Oracle
- Advanced Settings

03adv_oraDatabasePassword

Field Description

The password of the user that the application should use to log into the database. This is disabled if using NT Authentication.

Installation Type

- SQL Server / Oracle
- Advanced Settings

07sqlDatabaseSchema

Field Description

The database schema that you are using.

Installation Type

- SQL Server / Oracle
- Basic Settings

07oraDatabaseSchema

Field Description

The database schema that you are using.

Installation Type

- SQL Server / Oracle
- Basic Settings

05adv_sqlDatabaseSchema

Field Description

The database schema that you are using.

Installation Type

- SQL Server / Oracle
- Advanced Settings

05adv_oraDatabaseSchema

Field Description

The database schema that you are using.

Installation Type

- SQL Server / Oracle
- Advanced Settings

VoiceConsole Configuration

01voiceConsoleHostname

Field Description

Hostname of the machine onto which you are installing.

Installation Type

All

02displayDialogPort

Field Description

Default port that the application server uses for the Display Dialog feature.

Values

9091 (default)

Installation Type

All

03voiceConsoleHTTPSOption

Field Description

Enable secure HTTPS on all pages of the VoiceConsole On Prem deployment. Certain pages are still secure if this check box is not set.

Values

- true
- false

Installation Type

All

04voiceConsoleStorageDirectory

Field Description

Specify where you would like to have application files stored.

Values

path

Installation Type

All

06voiceConsoleSamlSSO

Field Description

Enable SAML Single SignOn (SSO) as part of the VoiceConsole On Prem deployment.

Values

- true
- false (default)

Installation Type

All

> **NOTE**
> SAML SSO cannot be enabled during an upgrade installation. It can only be enabled during a new installation.

License Server Configuration

02flexeraPort

Field Description

HTTPS port for the Local License Server

Values

- 1443 (default)

Installation Type

All

04flexeraPassword

Field Description

Password for the Local License Server.

Installation Type

All

CHAPTER 8

VOICECONSOLE LICENSING

Honeywell provides licensing that lets you run the software according to your purchase agreement.

License Term

Licensing for VoiceConsole is available as:

- Perpetual licensing for VoiceConsole On Prem deployment
- Subscription licensing for VoiceConsole On Prem deployment

License Delivery

Licensing delivery is handled by one of two methods.

Honeywell Software Licensing Portal

The Honeywell Software Licensing Portal is used to handle the licensing.

- For VoiceConsole On Prem deployment customers, Local Licensing is used, meaning a licensing component is installed with VoiceConsole and the licenses must be activated and deactivated via the Honeywell Software Licensing Portal.

> IMPORTANT
> By default, only partners and direct customers have access to the Honeywell Software Licensing Portal. If you purchased VoiceConsole through a partner, the partner provides the licensing information to their customers. The partner may choose to provide portal access to their customers.

Legacy Licensing

Honeywell generates and provides a license file to be imported into VoiceConsole.

> IMPORTANT
> Legacy Licensing is supported only in On Prem deployments.

- For VoiceConsole On Prem deployment customers, the customer must import the license into VoiceConsole.

Advantages of the Honeywell Software Licensing Portal

Legacy Licensing focuses on device type (A700XP, A700x, A700, A500) and features (Pick Up & Go, TTS, etc.). The Legacy Licensing is specific in what is supported via the license and the license is only available on the specific server used to import the license.

Local Licensing through the Honeywell Software Licensing Portal is a higher level licensing and adds flexibility to the licensing deployment:

- Rather than licensing 100 A700x devices and 50 A500 devices as would be done with Legacy Licensing, this method issues 150 licenses that could be used by any supported device type.
- Users can split the license among different servers. A license for 200 devices could be split between two servers by using the Activation ID to request and activate 150 copies of the license on one server and then activate the remaining 50 copies on a second server. If needs change, unused licenses can be deactivated on one server. Later these licenses can be activated on another server.
- Ramp ups (an increase in licenses over time, for example adding operators monthly to build capacity) and seasonal operators (licenses active for a period of three months for example) can be handled by adding additional Activation IDs with a corresponding subscription beginning and end.

License Architecture

> **IMPORTANT**
> VoiceConsole 6.1 and later uses a new application-level licensing architecture. VoiceConsole 5.x and earlier used hardware-type licensing which prevented the ability to use multiple device types with the same license.

Application Types

It is important to distinguish between the two types of applications that may be used with VoiceConsole.

- DevKit based applications are built from DevKit and may be referred to as DevKit based or branded for a specific solution such as Guided Work Solutions (GWS) or a Warehouse Management System (WMS). These applications run on A700x, A700XP, and Android devices.
    - Applications must be built from DevKit 1.15 or later. DevKit 2.1 or later is recommended.
    - Directed work applications are built from TaskBuilder and VoiceArtisan. These applications run on A500, A700, A700x, and A700XP.

VoiceConsole 6.x License Support

VoiceConsole 6.1 introduced application-level licensing. Application-level licensing used with VoiceConsole supports both DevKit based and directed work applications:

- DevKit based applications are licensed through VoiceConsole using Cloud Licensing or Local License Server. The license to run DevKit based applications is separate from the license to develop applications with DevKit. A separate license may be required for the GWS Connector. The license applies at the application level, allowing any supported device to use it.
- Honeywell continues to support TaskBuilder and VoiceArtisan-based (directed work) solutions. A DevKit based license is required for these devices and applications on VoiceConsole 6.1 and later. A500 and A700 are supported only in On Prem deployments.

Customers without a DevKit based license can continue using VoiceConsole 5.x where prior VoiceConsole and VoiceCatalyst product licenses are still valid.

Honeywell recommends that customers using DevKit based applications upgrade to VoiceConsole 6.6 to avoid potential compatibility problems with future software releases.

Available features may depend on licensing tier. Contact your customer service representative for details.

VoiceConsole Function	Application Type	
	DevKit Based	Directed Work
Honeywell Software Licensing Portal	Available	Requires DevKit based license
VoiceConsole On Prem Deployment	Available	Requires DevKit based license for VoiceConsole 6.1 or later, without DevKit based license must use VoiceConsole 5.x
VoiceConsole SaaS Deployment	Available	A700x or A700XP only, requires DevKit based license
Operational Intelligence Asset Insights	Available	A700x or A700XP only, requires DevKit based license
Performance+ for GWS Workflow Insights	Requires GWS Connector	Not available
Log Analyzer	Available	Not available

You must have a valid license before you can load device profiles, operators, or task packages onto devices. The license must also support the total number of devices connecting to VoiceConsole, not the number of devices per site. That is, you only need one license to cover all of your sites, but that license must support the total of all devices at all of the sites. If you need to add more devices, contact Honeywell Customer Service.

> **IMPORTANT**
> For VoiceConsole On Prem deployment customers, if you are installing into a clustered environment, you need to know both the number of devices and the number of nodes into which you are installing. You need to import the license into each installation of VoiceConsole on each node.

Configure License

Select the type of licensing to be used. The available options on this screen depend on the VoiceConsole deployment.

- Local Licensing
- Legacy Licensing

Local Licensing

Local Licensing is available for VoiceConsole On Prem deployments.

> **NOTE**
> The Local Licensing Server uses the IP and MAC addresses of the first network interface card. If it becomes necessary to replace any network adapter in the server, Honeywell suggests deactivating the licenses before the change. After the change is completed, the licenses can be activated again.

> **IMPORTANT**
> There are two different functions with different administrators within the licensing process as described below.

- **License Administrator** - This person is generally a member of the Sold To organization. The Sold to organization is either a Honeywell partner or a direct customer of Honeywell. This person is responsible for all license tasks within the Honeywell Software Licensing Portal. This person receives the Activation ID from Honeywell via email. AHoneywell partner can elect to have their customers register within the Honeywell Software Licensing Portal to perform the License Administrator function rather than relying on the partner to provide this function.

- **VoiceConsole Administrator** - This person is a member of the Ship To organization. The Ship To organization is either a direct customer of Honeywell or a customer of a Honeywell partner. This person is responsible for all license tasks within VoiceConsole. This person receives the Activation ID from the License Administrator.

Local Licensing Process

For more details on this process see Activate License or Deactivate License (Full).

1. License Administrator registers with and logs into the Honeywell Software Licensing Portal. Details can be found in the user guide available on the Honeywell Software Licensing Portal.
2. License Administrator notifies VoiceConsole Administrator of the Activation ID and the available number of copies. License Administrator can find this information on the licensing email from Honeywell or within the Honeywell Software Licensing Portal.
3. VoiceConsole Administrator opens VoiceConsole and goes to the Configure License screen and selects **Local Licensing** to enable this option.

   > NOTE
   > The **Test Connection To Licensing Server** function returns an error if a license activation cycle (as described below) has not yet been performed. Try again after activating the license.

4. VoiceConsole Administrator follows the Activate License, Deactivate License (Partial), or Deactivate License (Full) process and creates a License Request file.
5. VoiceConsole Administrator sends the License Request file to License Administrator.
6. License Administrator uploads the License Request file to the Honeywell Software Licensing Portal.
7. License Administrator downloads the License Response file from the Honeywell Software Licensing Portal.
8. License Administrator sends the License Response file to VoiceConsole Administrator.
9. VoiceConsole Administrator returns tothe Activate License, Deactivate License (Partial), or Deactivate License (Full) process and imports the License Response file.
10. VoiceConsole displays the license details on the View License screen.

Legacy Licensing

> IMPORTANT
> Legacy Licensing is supported only in On Prem deployments.

Go to the Configure License screen and select **Legacy Licensing** to enable this option.

Legacy Licensing Limitations

When using Legacy Licensing, VoiceConsole operates in DWS Mode and certain features are not available.

License Management

- Honeywell generates and provides the license file that determines the applications, products, and versions for which you can operate VoiceConsole and VoiceClient.
- VoiceConsole On Prem deployment customers must use Import License to add a license to VoiceConsole.
- VoiceConsole displays the license details on the View License screen.

> **NOTE**
> For On Prem deployments in a clustered environment, determine the number of devices and cluster nodes before you install VoiceConsole. Import the license into each VoiceConsole installation on every node.

Licensing Option Feature Availability

VoiceConsole operates in one of two modes depending on the type of license being used. This mode determines the availability of specific features as detailed below.

Comparison of Licensing Modes

Feature	DevKit Based Application Mode	Direct Work Mode
Licensing Type	Cloud Licensing or Local License Server, using Honeywell Software Licensing Portal	Legacy Licensing
Device Support	Android, A700XP, A700x, A700, A500	A700XP, A700x, A700, A500
Task Types	Supports DevKit based applications and Directed Work Tasks (VoiceArtisan / TaskBuilder)	Supports Directed Work (VoiceArtisan / TaskBuilder) only

Feature	DevKit Based Application Mode	Direct Work Mode
Operational Intelligence	Full synchronization and automated configuration file management	Limited or no data synchronization
Plug-In Management	Ability to import and embed Plug-Ins into tasks	Feature not available
Device States	Displayed for Android and Talkman devices	Displayed for Talkman devices
Operator Voice Templates	Enhanced template displayed	Limited template information displayed
Purge Device Logs	Purge interval can be configured	Not configurable
Operator Privacy Content Tracking within VoiceConsole	Required in VoiceConsole SaaS deployments Optional in VoiceConsole On Prem deployments	Feature not available
Auto Create Operators	Available in VoiceConsole SaaS deployments with supported applications.	Feature not available

Check Your Mode

1. Click the **Administration** tab.
2. Select **Licenses**.
3. Under **License Actions** click **Configure License**.
4. One of the following types is shown as active:
    - Cloud Licensing (VoiceConsole SaaS deployments only)
    - Local Licensing (VoiceConsole On Prem deployments only)
    - Legacy Licensing (VoiceConsoleOn Prem deployments only)
5. If Local License is selected, VoiceConsole is in Direct Work Solutions (DWS) mode.

Upgrade Your License

If licensed for Direct Work Solutions mode, contact your Honeywell representative for upgrade options.

Activate License

> **NOTE**
> This feature is only available when Local Licensing is selected on the Configure License screen.

> **IMPORTANT**
> There are two different functions with different administrators within the licensing process as described below.

- **License Administrator** - This person is generally a member of the Sold To organization. The Sold to organization is either a Honeywell partner or a direct customer of Honeywell. This person is responsible for all license tasks within the Honeywell Software Licensing Portal. This person receives the Activation ID from Honeywell via email. AHoneywell partner can elect to have their customers register within the Honeywell Software Licensing Portal to perform the License Administrator function rather than relying on the partner to provide this function.
- **VoiceConsole Administrator** - This person is a member of the Ship To organization. The Ship To organization is either a direct customer of Honeywell or a customer of a Honeywell partner. This person is responsible for all license tasks within VoiceConsole. This person receives the Activation ID from the License Administrator.

Create License Request File

This process creates a request on the local machine that is sent to the Honeywell Software Licensing Portal.

1. The VoiceConsole Administrator enters the Activation ID for the desired license. The Activation ID is provided by the License Administrator.
2. The VoiceConsole Administrator enters the number of copies.
    - The number of copies of the license requested corresponds to the number of devices permitted to use that feature. The License Administrator can view this information within the Honeywell Software Licensing Portal.
    - The minimum is 1, which is the default.
    - The maximum is the available count on the Honeywell Software Licensing Portal. An error is returned during the process if more copies are requested than available on the server.

- Additional requests with the same Activation ID *replace* the previous request rather than *adding to* the previous request.
    - If 30 copies are active and later 35 are requested, only 35 license copies are available locally.
    - If 30 copies are active and later 20 are requested, only 20 license copies are available locally. This is treated as a partial return and additional steps are necessary to free up those licenses in the Honeywell Software Licensing Portal.

3. The VoiceConsole Administrator clicks **Generate License Request.** Upon success, a request file is created in the Downloads folder. The name of this request file may be:
    - requestfile.bin (versions of VoiceConsole prior to 6.4)
    - activation_requestfile.bin (initial license activation for VoiceConsole 6.4 and later)
    - *companyname*_requestfile.bin (subsequent license activation requests for the license include the company name for VoiceConsole 6.4 and later)

    > **NOTE**
    > If this file already exists, the name increments, such as requestfile (1).bin, etc.

4. The VoiceConsole Administrator sends request file to the License Administrator.

Process License Request File

This process uploads the license request file into the Honeywell Software Licensing Portal and generates the response.

1. The License Administrator accesses the Honeywell Software Licensing Portal.
2. The License Administrator selects **Devices** > **Offline Device Management**.
3. The License Administrator selects **Generate license or confirm license reduction or return** and clicks **Choose File** to browse for request file.
4. The License Administrator clicks **Upload**.
5. Once completed, a message is displayed indicating the license has been generated with a link to download capabilityResponse.bin.

    > **IMPORTANT**
    > If there is a problem with the license request an error message is displayed after uploading the request file. Common errors include an invalid Activation ID or requesting more copies of the license than are available. If an error is displayed, do not download the Capability Response. Instead, ask the VoiceConsole Administrator to fix the error and generate a new request file.

6. When the License Administrator clicks the link, capabilityResponse.bin is downloaded to the Downloads folder.

> **NOTE**
> If this file already exists, the name increments, such as capabilityResponse (1).bin, etc.

7. The License Administrator sends capbilityResponse.bin to the VoiceConsole Administrator.

Import License Response File

The response file generated above must be imported into VoiceConsole by the VoiceConsole Administrator.

1. The VoiceConsole Administrator browses to and selects capabilityResponse.bin provided by the License Administrator.
2. The VoiceConsole Administrator clicks **Import**.
3. The VoiceConsole Administrator can view the license list to confirm the import.

Deactivate License (Full)

Within the Honeywell Software Licensing Portal, deactivating a license is known as a license return.

> **NOTE**
> This feature is only available when Local Licensing is selected on the Configure License screen.

The Activation ID is provided by Honeywell for direct customers and by the partner for their customers.

The instructions below are for a complete deactivation (or return) of licenses. See Deactivate License (Partial) to deactivate only some of the licenses.

Create License Request File

This process creates a request on the local machine that is sent to the Honeywell Software Licensing Portal.

1. The VoiceConsole Administrator enters the Activation ID for the desired license. The Activation ID is provided by the License Administrator.

   This Activation ID can also be found on the View License page.

2. The VoiceConsole Administrator clicks **Generate License Request.** Upon success, a request file is created in the Downloads folder. The name of this request file may be:
   - requestfile.bin (versions of VoiceConsole prior to 6.4)
   - activation_requestfile.bin (initial license activation for VoiceConsole 6.4 and later)

- *companyname*_requestfile.bin (subsequent license activation requests for the license include the company name for VoiceConsole 6.4 and later)

> **NOTE**
> If this file already exists, the name increments, such as requestfile (1).bin, etc.

3. The VoiceConsole Administrator sends request file to the License Administrator.

Process License Request File

This process uploads the license request file into the Honeywell Software Licensing Portal and generates the response.

1. The License Administrator accesses the Honeywell Software Licensing Portal.
2. The License Administrator selects **Devices** > **Offline Device Management**.
3. The License Administrator selects **Generate license or confirm license reduction or return** and clicks **Choose File** to browse for request file.
4. The License Administrator clicks **Upload**.
5. Once completed, a message is displayed indicating the license has been generated with a link to download capabilityResponse.bin.

> **IMPORTANT**
> If there is a problem with the license request an error message is displayed after uploading the request file. Common errors include an invalid Activation ID. If an error is displayed, do not download the Capability Response. Instead, ask the VoiceConsole Administrator to fix the error and generate a new request file.

6. When the License Administrator clicks the link, capabilityResponse.bin is downloaded to the Downloads folder.

> **NOTE**
> If this file already exists, the name increments, such as capabilityResponse (1).bin, etc.

7. The License Administrator sends capbilityResponse.bin to the VoiceConsole Administrator.

Import License Response File

The response file generated above must be imported into VoiceConsole.

1. Browse to and select the capabilityResponse.bin file generated above.
2. Click **Import**.
3. View the license list to confirm the deactivation within VoiceConsole.

Release Licenses within Honeywell Software Licensing Portal

At this point, the licenses are no longer showing within VoiceConsole. However, they are still assigned within the Honeywell Software Licensing Portal and cannot be activated elsewhere. To release them within the portal, it is necessary to generate a second request file.

1. The VoiceConsole Administrator enters the Activation ID for the desired license. The Activation ID is provided by the License Administrator.

   This must be the same Activation ID as used in the first request above.

2. The VoiceConsole Administrator clicks **Generate License Request.** Upon success, a request file is created in the Downloads folder. The name of this request file may be:

   - requestfile.bin (versions of VoiceConsole prior to 6.4)
   - activation_requestfile.bin (initial license activation for VoiceConsole 6.4 and later)
   - *companyname*_requestfile.bin (subsequent license activation requests for the license include the company name for VoiceConsole 6.4 and later)

   > NOTE
   > If this file already exists, the name increments, such as requestfile (1).bin, etc.

3. The VoiceConsole Administrator sends request file to the License Administrator.
4. The License Administrator accesses the Honeywell Software Licensing Portal.
5. The License Administrator selects **Devices** > **Offline Device Management**.
6. The License Administrator selects **Generate license or confirm license reduction or return** and clicks **Choose File** to browse for request file.
7. The License Administrator clicks **Upload**.
8. Once completed, a message is displayed indicating the new response is no different that the previous response. An option is provided to download the response but it not necessary to do this.
9. The process is complete.
10. The License Administrator can verify the licenses are returned within the Honeywell Software Licensing Portal.

Partial Return of Licenses

The Deactivate License feature deactivates all copies of the license.

If you want to only deactivate a portion, you must use the Activate License procedure and create a request for the new number to be active.

Example:

There are 100 active copies of the license. You wish to deactivate 60 of those licenses.

In this case, create and process an activation request for 40 licenses. The 60 are now returned and available in Honeywell Software Licensing Portal. The 40 remain available within VoiceConsole.

Deactivate License (Partial)

Within the Honeywell Software Licensing Portal, a partial deactivation of a license is known as a partial return or license reduction.

> **NOTE**
> This feature is only available when Local Licensing is selected on the Configure License screen.

The Activation ID is provided by Honeywell for direct customers and by the partner for their customers.

The instructions below are for a partial deactivation (or return) of licenses. See Deactivate License (Full) below to deactivate only some of the licenses.

Create License Request File

This process creates a request on the local machine that is sent to the Honeywell Software Licensing Portal.

1. The VoiceConsole Administrator enters the Activation ID for the desired license. The Activation ID is provided by the License Administrator.

   This Activation ID can also be found on the View License page.

2. The VoiceConsole Administrator enters the number of copies that are to remain activated.
   - The minimum is 1, which is the default.
   - The maximum in this use case is the current activation number minus 1.
   - This request *replaces* the previous request rather than *adding to or subtracting from* the previous request.
     - If 30 copies are active and later 20 are requested, only 25 license copies are available locally. This is treated as a partial return and additional steps are necessary to free up those licenses in the Honeywell Software Licensing Portal.

3. The VoiceConsole Administrator clicks **Generate License Request.** Upon success, a request file is created in the Downloads folder. The name of this request file may be:
   - requestfile.bin (versions of VoiceConsole prior to 6.4)
   - activation_requestfile.bin (initial license activation for VoiceConsole 6.4 and later)

- *companyname*_requestfile.bin (subsequent license activation requests for the license include the company name for VoiceConsole 6.4 and later)

> **NOTE**
> If this file already exists, the name increments, such as requestfile (1).bin, etc.

4. The VoiceConsole Administrator sends request file to the License Administrator.

Process License Request File

This process uploads the license request file into the Honeywell Software Licensing Portal and generates the response.

1. The License Administrator accesses the Honeywell Software Licensing Portal.
2. The License Administrator selects **Devices** > **Offline Device Management**.
3. The License Administrator selects **Generate license or confirm license reduction or return** and clicks **Choose File** to browse for request file.
4. The License Administrator clicks **Upload**.
5. Once completed, a message is displayed indicating the license has been generated with a link to download capabilityResponse.bin.

> **IMPORTANT**
> If there is a problem with the license request an error message is displayed after uploading the request file. Common errors include an invalid Activation ID. If an error is displayed, do not download the Capability Response. Instead, ask the VoiceConsole Administrator to fix the error and generate a new request file.

6. When the License Administrator clicks the link, capabilityResponse.bin is downloaded to the Downloads folder.

> **NOTE**
> If this file already exists, the name increments, such as capabilityResponse (1).bin, etc.

7. The License Administrator sends capbilityResponse.bin to the VoiceConsole Administrator.

Import License Response File

The response file generated above must be imported into VoiceConsole.

1. Browse to and select the capabilityResponse.bin file generated above.
2. Click **Import**.
3. View the license list to confirm the deactivation within VoiceConsole.

Release Licenses within Honeywell Software Licensing Portal

At this point, the licenses are no longer showing within VoiceConsole. However, they are still assigned within the Honeywell Software Licensing Portal and cannot be activated elsewhere. To release them within the portal, it is necessary to generate a second request file.

1. The VoiceConsole Administrator enters the Activation ID for the desired license. The Activation ID is provided by the License Administrator.

   This must be the same Activation ID as used in the first request above.

2. The VoiceConsole Administrator enters the number of copies that are to remain activated. This must match the number in the original request above.
3. The VoiceConsole Administrator clicks **Generate License Request.** Upon success, a request file is created in the Downloads folder. The name of this request file may be:
   - requestfile.bin (versions of VoiceConsole prior to 6.4)
   - activation_requestfile.bin (initial license activation for VoiceConsole 6.4 and later)
   - *companyname*_requestfile.bin (subsequent license activation requests for the license include the company name for VoiceConsole 6.4 and later)

   > **NOTE**
   > If this file already exists, the name increments, such as requestfile (1).bin, etc.

4. The VoiceConsole Administrator sends request file to the License Administrator.
5. The License Administrator accesses the Honeywell Software Licensing Portal.
6. The License Administrator selects **Devices** > **Offline Device Management**.
7. The License Administrator selects **Generate license or confirm license reduction or return** and clicks **Choose File** to browse for request file.
8. The License Administrator clicks **Upload**.
9. Once completed, a message is displayed indicating the new response is no different that the previous response. An option is provided to download the response but it not necessary to do this.
10. The process is complete.
11. The License Administrator can verify the licenses are returned within the Honeywell Software Licensing Portal.

Partial Return of Licenses

The Deactivate License only deactivates all copies of the license.

If you wish to only deactivate a portion, you must use the Activate License procedure and create a request for the new amount that are to be active.

Example:

There are 100 active copies of the license. You wish to deactivate 60 of those licenses.

In this case, create and process an activation request for 40 licenses. The 60 are now returned and available in Honeywell Software Licensing Portal. The 40 remain available within VoiceConsole.

Import License

> **NOTE**
> This feature is only available when using Legacy Licensing.

After you install VoiceConsole, the license file must be imported into the system before you can use the application.

1. Under **Administration**, click **Licenses**.
2. Under **License Actions**, select **Import license**.
   The **Import License** page opens.
3. Click **Browse**, and navigate to and select the file to import.
4. Select the license type: **Permanent** or **Temporary**.
5. Click **Import License**.
6. After reading the license agreement, click **I accept the license agreement** located at the bottom of the page.

The license file is imported. Once the application is licensed, the licensee company name is displayed in the top right corner of the application.

Permanent License

Select this option when installing the primary VoiceConsole license assigned to you.

Temporary License

Select this option for license changes required, such as:

- Seasonal work license increase
- "Ramp up" licensing for contracts that cover a period of time greater than three years when the number of licenses increases each year

When a license expires, you must sign on to VoiceConsole and do one of the following:

- Re-apply a previous, unexpired license (permanent or temporary)
- Import a new license

VoiceConsole does not append or compound a temporary license. It replaces the existing license as soon as it is applied.

The temporary license must include all device numbers. For example, to run a specific version of VoiceConsole in production, you need a license that includes all devices, including those for testing.

> **NOTE**
> The permanent and temporary buttons are for setting a category type. There is no further automatic handling or reverting of the license. Honeywell recommends using the permanent license option for all non-expiring licenses and the temporary option for any expiring licenses.

Apply License

> **NOTE**
> This feature is only available when using Legacy Licensing.

An inactive VoiceConsole license can be activated:

1. Under **Administration**, click **Licenses**.
2. Select a license from the list of licenses that is inactive.
3. Under **License Actions**, select **Apply license**.

The license file is activated.

Delete License

> **NOTE**
> This feature is only available when using Legacy Licensing.

A VoiceConsole license can be deleted:

1. Under **Administration**, click **Licenses**.
2. Select one or more licenses from the list of licenses.
3. Under **License Actions**, select **Delete license**.
4. Confirm that you wish to delete the license or cancel the operation.

All selected license files are deleted.

> **NOTE**
> You cannot delete a license that is currently Active. The **Delete license** action is disabled if the active license is selected. To delete a license, it must be in an Inactive status.

View License

The license detail is displayed. The detail varies by type of license.

Cloud License

> NOTE
> The following licenses are not displayed in the table:
>
> - Licenses with a feature count of zero (all copies are consumed by devices)
> - Licenses which have expired
> - Licenses with a future start date
>
> Details for these licenses can be displayed in the Honeywell Software Licensing Portal.

Table Features

- **Manage Filter**: Refine the list of items displayed
- **Add or Remove Columns**: Customize the displayed columns
- **Copy Selection**: Select one or more items to copy to the clipboard
- **Printable Version**: Generate a printer-friendly version

License Details

The license displays the following fields for Cloud licensing:

- **Date Issued**: Date license was issued
- **Activation ID**: Unique license identifier
- **License Type**: Perpetual or Subscription
  - Subscription licenses have a start and expiration date
  - Perpetual licenses have a start date but no expiration date for the licensed version of the product. Maintenance to include upgrades to future versions is optional
- **Feature Name**: Name of feature included in license
- **Feature Count**: Number of copies of this license that are available. If all copies are in use, the feature count is zero the license is not displayed in the table.
- **Start Date**: License start date
- **End Date**: License end date (subscription only)
- **Support Contract Expiry Date**: End date for support contract for perpetual licenses

Local License

Table Features

- **Manage Filter**: Refine the list of items displayed
- **Add or Remove Columns**: Customize the displayed columns
- **Copy Selection**: Select one or more items to copy to the clipboard
- **Printable Version**: Generate a printer-friendly version

License Details

The license displays the following fields for Local Licensing:

- **Date Issued**: Date license was issued
- **Activation ID**: Unique license identifier
- **License Type**: Perpetual or Subscription
  - Subscription licenses have a start and expiration date
  - Perpetual licenses have a start date but no expiration date for the licensed version of the product, maintenance to include upgrades to future versions is optional
- **Feature Name**: Name of feature included in license
- **Used**: Number of copies of this license that are in use
- **Available**: Number of copies of this license that are available
- **Total**: Total number of copies of this license
- **Start Date**: License start date
- **End Date**: License end date (subscription only
- **Active**: Status of the license
  - **Yes**: The license is currently active (current date is within the Start Date to End Date range
  - **No**: The license is either expired (current date past End Date) or not yet active (current date before Start Date)
- **Support Contract Expiry Date**: End date for support contract for perpetual licenses

Legacy License

> NOTE
> When using a Legacy License, VoiceConsole operates DWS Mode and some features are not availabe.

Table Features

- **Manage Filter**: Refine the list of items displayed
- **Add or Remove Columns**: Customize the displayed columns
- **Copy Selection**: Select one or more items to copy to the clipboard
- **Printable Version**: Generate a printer-friendly version

License Details

The legacy license displays the following fields:

- **Date Entered**: The date the license was imported into VoiceConsole
- **License Type**: Either Permanent or Temporary as identified during license import
- **License Name**: The name assigned when the license was created
- **License Server Location**: The location assigned when the license was created
- **License Status**: Identifies the license status: Active, Inactive, Invalid, etc., only one license may be active at a time

Clicking on a license in the table displays the additional details for that license including licensed products, versions, and devices.

View Agreement

> NOTE
> This feature is only available when using Legacy Licensing.

After a license has been imported, you can view the license agreement on the **View Licenses** page.

1. Under **Navigation**, click **Licenses**.
2. Under **License Actions**, select **View agreement**.
   The **View License Agreement** page opens.
3. If you want to print the license agreement, click **Printable View** at the bottom of the **View License Agreement** page.
   The agreement opens in a browser window from which you can print the agreement.

CHAPTER 9

CONFIGURE SECURITY

To keep networks secure, Honeywell recommends authentication combined with a protocol that supports authentication methods.

To secure web server communications, VoiceConsole supports HTTPS. To secure the device connectivity on a wireless network, VoiceConsole uses Extensible Authentication Protocol (EAP).

- Enabling HTTPS involves obtaining and installing a certificate. See Installing a certificate for detailed steps.
- Enabling EAP consists of the following procedures. This section describes the first two procedures. See VoiceConsole help for more details of loading device profiles.
  - Configuring EAP for each site
  - Creating device profiles with EAP selected
  - Loading the device profiles

> **NOTE**
> These security configurations should be performed by a System Administrator, or the settings should be provided by a System Administrator.

Create and Install a Certificate for HTTPS

VoiceConsole provides a self-signed certificate to be used when Hypertext Transfer Protocol Secure (HTTPS) is enabled. This certificate provides a heightened level of security with HTTPS.

If you want a higher level of security, Honeywell recommends creating and installing your own certificate.

Create a Certificate Signing Request

To create a certificate, you need to first create a certificate signing request.

1. Copy and paste the following command into a terminal session on the machine where the Java keytool is located.
   The command assumes that the Java keytool is installed on your server.
   Replace the variables that appear in <angle brackets> with your own information.

```
keytool -genkey -alias tomcat -keyalg RSA -keysize 2048 -keystore
<keystorePath>/.keystore -dname "CN=<Domain name of server>, O=<Your
Organization>, OU=<Organizational Unit>, L=<City>, ST=<State>,
C=<Country>"
```

2. If you are running this command on Windows, paste it into the command prompt, and ensure that the JDK bin folder is in your PATH environment.
3. Press **Enter**.
4. Enter a keystore password.
5. Press **Enter**.
6. Copy and paste the following command, replacing the variables in <angle brackets> with your information.

```
keytool -certreq -alias tomcat -file <csrPath>/<csrFileName>.csr -keystore
<keystorePath>/.keystore
```

7. Verify keystore password.
8. Press **Enter**, and complete the creation.

The Java keytool utility creates your private key and certificate signing request as <keystorePath>/ .keystore and <csrPath>/<csrFileName>.csr.

Get a Certificate from a Certificate Authority

> **TIP**
> To enable HTTPS for communications between the device and VoiceConsole, you must use an external certificate authority.

1. Send the files created by the Java keytool to a certificate authority, such as WebTrust.
2. Purchase a certificate.

The following certificate authorities are currently enabled:

A700x Certificate Authorities

- ACCVRAIZ1
- AC RAIZ FNMT-RCM
- AC RAIZ FNMT-RCM SERVIDORES SEGUROS
- Actalis Authentication Root CA

- AffirmTrust Commercial
- AffirmTrust Networking
- AffirmTrust Premium
- AffirmTrust Premium ECC
- Amazon Root CA 1
- Amazon Root CA 2
- Amazon Root CA 3
- Amazon Root CA 4
- ANF Secure Server Root CA
- Atos TrustedRoot 2011
- Autoridad de Certificacion Firmaprofesional CIF A62634068
- Baltimore CyberTrust Root
- Buypass Class 2 Root CA
- Buypass Class 3 Root CA
- CA Disig Root R2
- Certigna
- Certigna Root CAcertSIGN ROOT CA
- certSIGN ROOT CA G2
- Certum EC-384 CA
- Certum Trusted Network CA 2
- Certum Trusted Network CA
- Certum Trusted Root CA
- CFCA EV ROOT
- AAA Certificate Services
- COMODO Certification Authority
- COMODO ECC Certification Authority
- COMODO RSA Certification Authority
- Cybertrust Global Root
- DigiCert Assured ID Root CA
- DigiCert Assured ID Root G2
- DigiCert Assured ID Root G3
- DigiCert Global Root CA

- DigiCert Global Root G2
- DigiCert Global Root G3
- DigiCert High Assurance EV Root CA
- DigiCert SHA2 Secure Server CA
- DigiCert Trusted Root G4
- DoD Root CA 3
- DoD Root CA 4
- DoD Root CA 5
- DOD SW CA-60
- D-TRUST Root Class 3 CA 2 2009
- D-TRUST Root Class 3 CA 2 EV 2009
- EC-ACC
- emSign ECC Root CA - C3
- emSign ECC Root CA - G3
- emSign Root CA - C1
- emSign Root CA - G1
- Entrust.net Certification Authority (2048)
- Entrust Root Certification Authority
- Entrust Root Certification Authority - EC1
- Entrust Root Certification Authority - G2
- Entrust Root Certification Authority - G4
- ePKI Root Certification Authority
- e-Szigno Root CA 2017
- E-Tugra Certification Authority
- GDCA TrustAUTH R5 ROOT
- GeoTrust TLS RSA CA G1
- GlobalSign
- GlobalSign
- GlobalSign Root CA
- GlobalSign
- GlobalSign
- GlobalSign

- GlobalSign Root E46
- GlobalSign Root R46
- GLOBALTRUST 2020
- Go Daddy Class 2 Certification Authority
- Go Daddy Root Certificate Authority - G2
- GTS Root R1
- GTS Root R2
- GTS Root R3
- GTS Root R4
- Hellenic Academic and Research Institutions ECC RootCA 2015
- Hellenic Academic and Research Institutions RootCA 2011
- Hellenic Academic and Research Institutions RootCA 2015
- Hongkong Post Root CA 1
- Hongkong Post Root CA 3
- HydrantID SSL ICA G2
- IdenTrust Commercial Root CA 1
- IdenTrust Public Sector Root CA 1
- ISRG Root X1
- Izenpe.com
- Microsec e-Szigno Root CA 2009
- Microsoft ECC Root Certificate Authority 2017
- Microsoft RSA Root Certificate Authority 2017
- NAVER Global Root Certification Authority
- NetLock Arany (Class Gold)
- Network Solutions Certificate Authority
- OISTE WISeKey Global Root GB CA
- OISTE WISeKey Global Root GC CA
- QuoVadis Root CA 1 G3
- QuoVadis Root CA 2
- QuoVadis Root CA 2 G3
- QuoVadis Root CA 3
- QuoVadis Root CA 3 G3

- Secure Global CA
- SecureSign RootCA11
- SecureTrust CA
- Security Communication RootCA2
- Security Communication RootCA1
- SSL.com EV Root Certification Authority ECC
- SSL.com EV Root Certification Authority RSA R2
- SSL.com Root Certification Authority ECC
- SSL.com Root Certification Authority RSA
- Staat der Nederlanden EV Root CA
- Starfield Technologies, Inc.
- Starfield Root Certificate Authority - G2
- Starfield Secure Certificate Authority - G2
- Starfield Services Root Certificate Authority - G2
- SwissSign Gold CA - G2
- SwissSign Silver CA - G2
- SZAFIR ROOT CA2
- TeliaSonera Root CA v1
- Thawte RSA CA 2018
- TrustCor ECA-1
- TrustCor RootCert CA-1
- TrustCor RootCert CA-2
- Trustwave Global Certification Authority
- Trustwave Global ECC P256 Certification Authority
- Trustwave Global ECC P384 Certification Authority
- T-TeleSec GlobalRoot Class 2
- T-TeleSec GlobalRoot Class 3
- TUBITAK Kamu SM SSL Kok Sertifikasi - Surum 1
- TWCA Global Root CA
- TWCA Root Certification Authority
- UCA Extended Validation Root
- UCA Global G2 Root

- USERTrust ECC Certification Authority
- USERTrust RSA Certification Authority
- XRamp Global Certification Authority

A700 and A500 Certificate Authorities

- COMODO Certification Authority
- Cybertrust Educational CA
- DigiCert Global CA
- DigiCert High Assurance CA - 3
- Entrust Certification Authority - L1B
- EssentialSSL CA
- GlobalSign Domain Validation CA
- GlobalSign Organization Validation CA
- Go Daddy Secure Certification Authority
- Microsoft Internet Authority
- Microsoft Secure Server Authority
- Network Solutions Certificate Authority
- Starfield Secure Certification Authority
- Thawte SGC CA
- VeriSign Class 3 Extended Validation SSL CA
- VeriSign Class 3 Extended Validation SSL SGC CA
- VeriSign Class 3 Secure Server CA
- VeriSign Class 3 Secure Server CA - G2
- www.verisign.com/CPS Incorp.by Ref. LIABILITY LTD.(c)97 VeriSign

Install the Certificate

IMPORTANT
If you are running this command on Windows:

1. Paste it into the command prompt
2. Ensure that the Java JDK bin folder is in your PATH environment

> **NOTE**
> To run the keytool command, install Java JDK or use the included keytool program that is installed alongside VoiceConsole/VoiceLink in the <install Path/jre/bin>.

> **NOTE**
> Open a command prompt to run the commands below.

From a Certificate Authority

1. Place the certificate file that you received from a certificate authority into the directory where your private key and certificate signing request were saved.
2. Run the following command, replacing the variables with your information.

```
Keytool -import -trustcacerts -alias tomcat -file certificateFileName.p7b
-keystore keystorePath/.keystore
```

3. A confirmation of installation appears.

Generate Your Own Self-Signed Certificate

To generate a self-signed certificate that is valid for a specified number of days, perform the following steps:

1. Copy and paste the following command into a terminal session on the machine where the Java keytool is located. The command assumes that the Java keytool is installed on your server.
   Replace the variables with your own information.

```
keytool -genkey -validity number of days -alias tomcat -keyalg RSA -
keysize 2048 -keystore keystorePath/.keystore -dname "CN=Domain name of
server, O=Your Organization, OU=Organizational Unit, L=City, ST=State,
C=Country"
```

2. Press **Enter**.
3. Enter a keystore password, and press **Enter**.
4. Enter the same password to confirm, and press **Enter**.
5. Press **Enter** again to confirm using the same password for the Tomcat alias.

Configure VoiceConsole

To configure VoiceConsole to use the certificate, perform the following steps.

1. Stop the VocollectWebApplicationsVC service.
2. Place the certificate keystore file in *InstallLocation*\VoiceConsole\tomcat\webapps\VoiceConsole.
3. Find the Tomcat server.xml file at *InstallLocation*\VoiceConsole\tomcat\conf.
4. Open server.xml in a text editor.
5. Update the location of the keystore file and the keystore password in the Tomcat connector definition in server.xml.

   > **NOTE**
   > In older VoiceConsole versions, there may be two connector definitions that require this change. Each connector definition is a separate Connector XML element.

   Example:

   ```
   <Connector port="9443" maxHttpHeaderSize="8192" maxThreads="150"
   minSpareThreads="25" maxSpareThreads="75" enableLookups="false"
   disableUploadTimeout="true" acceptCount="100" scheme="https" secure="true"
   SSLEnabled="true" clientAuth="false" sslProtocol="TLS"
   sslEnabledProtocols="TLSv1, TLSv1.1, TLSv1.2, TLSv1.3"
   keystoreFile="webapps/VoiceConsole/KeystoreFileName"
   keystorePass="KeyStorePasswordEnteredAbove" compression="on"
   compressionMinSize="1024" noCompressionUserAgents="gozilla, traviata"
   compressableMimeType="text/html,text/xml,text/plain,text/css,text/javascri
   pt,application/x-javascript,application/javascript"/>
   ```

   > **NOTE**
   > Changing the keystore file path is not supported.

6. Save your changes.
7. Find the server.properties file at *InstallLocation*\VoiceConsole\tomcat\webapps\VoiceConsole\WEB-INF\classes.
8. Open server.properties in a text editor.
9. Locate and update the following properties:

   ```
   server.cert.fileName=KeystoreFileName
   server.cert.password=KeyStorePasswordEnteredAbove
   ```

   > **NOTE**
   > On VoiceConsole 6.1 and earlier, including VoiceConsole 5.6.5, additional steps are

> required for the VoiceConsole-Based Device Display Dialog to function correctly. Contact Technical Support for details.

10. Save your changes.
11. Restart the VocollectWebApplicationsVC service.

Configure EAP for the Site

To get to the pages letting you configure EAP for a site, perform the following steps:

1. In the **Administration** section, click **Sites**.
2. In the **View Sites** list, select the site that you want to configure.
3. Under **Site Actions**, select **Configure EAP for selected site**.

   The **Configure Behavior** page opens.

Configure Behavior

1. Select one of the EAP types. For information on each of these types, see Extensible Authentication Protocol.

   Either **Password** or **Certificate** is automatically selected in the **Type** section, depending on what EAP type you selected.

   > NOTE
   > If **Certificate** is selected, Honeywell strongly recommends using PEM or base 64 formatted certificates.

2. Select the manner in which the devices connect to the network in the **Association** section. For more information on association types, see Extensible Authentication Protocol.
3. Specify whether you want to use PINs in addition to a username and password. This is recommended if you are setting up an operator-based configuration.
4. Specify whether you want to force the device to log off of the network when it is placed in the charger. It then logs onto the network as the restricted user.
5. If you opt to force a logoff, you should provide restricted user credentials for the device to use while in the charger. You may proceed without providing valid restricted user credentials; but if you choose to do so, the devices must be serially loaded every time they are removed from the charger.
6. Click **Next**.

   The **Configure LDAP** page opens.

Configure LDAP

1. Select whether to enable LDAP.

> **NOTE**
> If you selected operator-based association, LDAP settings are required.

2. If an LDAP configuration already exists, you can select it. Otherwise, select **Create New Configuration**.
3. Specify whether you want to use SSL. If so, you can view trusted certificate sites and add to them by clicking the **View Trusted Certificates** action.
4. Enter the server host and port.
5. Specify your desired parameters in the **Search User Distinguished Name** and **Search User Password** fields.
6. Enter the search base (where to look) and searchable attribute (what to look for) on the LDAP server.
7. Enter the password that it is to change once it is located.
8. If you want to test the Directory Server that you entered, enter the test user name, and click the **Directory Server Connection Information** button.
9. Click **Next**.

   The **Configure Credentials** page opens.

Configure Credentials

1. Enter or change the server credentials by selecting a certificate, if desired.

> **NOTE**
> You may choose to not use a certificate, but Honeywell strongly recommends that you do use one for added security.

2. Specify whether to use the same SSID and EAP type for the restricted user as entered in the Configure LDAP page. If you do not want to use the same EAP type and SSID, enter the EAP type and SSID for the restricted user. If you want the restricted user to have only access to a portion of the network, this is where you would enter that information.
3. Enter information for the users.
4. Click **Next**.

   The **Summary** page opens.

Summary

1. Review the summary of the selections that you made in the previous steps.
2. Click **Done**.

> **NOTE**
> If you created an operator-based association, Honeywell recommends that you create a shortcut to the Operator Login page, and place the shortcut on the desktop of the computer on which operators use to change credentials.

Configure the Device Profiles with EAP

To begin creating a device profile, perform the following steps:

1. In the **Device Management** section under **Navigation**, click **Device Profiles**.
2. Under **Device Profile Actions**, select **Create new device profile.** The **Select VoiceClient** page opens.
3. Enter the Profile Name.
4. In the **Profile Type** list, select **Full Profile**.
5. From the **VoiceClient** drop-down list, select a VoiceClient to associate with the profile, or select **Import New VoiceClient** to import a file.
6. From the **Voices** drop-down list, select a Voice to associate with the profile.
7. Click **Next**.
   The **Select Configuration Source** page opens.
8. Select one of the following:
   - **Create a new configuration** if you are creating the configuration in VoiceConsole.
   - **Import from file** if you are importing the configuration from a .cci or .vrg file. Click **Browse** to navigate to and open the .cci or .vrg file.
   - **Copy from existing profile** if you are copying the profile from one in VoiceConsole. Select the name of an existing profile from the drop-down list.
9. Click **Next**.
   The **Configure Profile** page opens.
10. Set up the configuration for the new profile on the **Network Configuration** tab, including selecting a security option available in the **Security** drop-down list.
11. Enter any advanced device settings on the **Advanced Settings** tab.
12. Click **Finish**.

View Trusted Certificates

To view trusted certificates, you must be on the Configure LDAP screen (page 2 of the EAP configuration wizard). To access this screen:

1. Under the **Administration** tab, click **Sites**.
2. In the **View Sites** list, select a site.

3. Under **Site Actions**, select **Configure EAP for selected site**.
   The **Configure Behavior** page opens.
4. Click **Next** for the **Configure LDAP** page.
5. Under **Site Actions**, click **View Trusted Certificates**.

When you select **View Trusted Certificates**, the **Trusted Certificate** dialog box opens.

Trusted Certificate Authorities

The current trusted authorities list for VoiceConsole is displayed.

Add New Trusted Certificate Authorities

Add an Existing Certificate

1. Click **Choose File**.
2. Navigate to the location of your trusted certificate for LDAPS configuration.
3. Click the certificate file and then click **Open**.
4. On the **New Trusted Certificate Authorities** dialog box, click **Add Certificate**.

Generate a Certificate

> NOTE
> This section applies only to a VoiceConsole On Prem deployment.

> TIP
> The default Java installation folder used for VoiceConsole in Windows is **C:\program files\vocollect\voiceconsole\jre**. In Unix/Linux, it is **/opt/vocollect/voiceconsole/jre**. A secure Java connection with a server requires a valid and trusted certificate inside the Java keystore, located at this same directory. (It is required for the certificate to be imported in this trusted keystore.)

When Java (both in JDK and JRE) is installed and the environment variable JAVA_HOME is configured, an import tool called keytool becomes available. It can be accessed by way of a command prompt (Windows OS) or a terminal (Unix/Linux-based OS). Use Keytool to import the certificate as in the following Windows OS example:

a. Press the Windows key
b. Type command and click **Command Prompt**.
c. Enter the following keytool command:
   keytool -import -trustcacerts -alias apacheDSLdap -file "C:\program

files\vocollect\voiceconsole\jre\publicApacheLdap.cer" -keystore "C:\program files\vocollect\voiceconsole\jre\publicApacheLdap.cer"

The keytool parameters are as follows:

- **-import**: When you import a certificate with this parameter, the keytool validates the reply with trusted certificates from the keystore, and optionally, the certificates configured in the cacerts keystore file when the **-trustcacerts** parameter is specified
- **-trustcacerts**: For importing into Java cacerts keystore
- **-alias**: Assigns the alias apacheDSLdap to the entry certificate
- **-file**: Identifies the certificate path file to be imported
- **-keystore**: Identifies the explicit path of the keystore where the certificate is to be imported

The following illustrates a completed example.

```
Microsoft Windows [Version 10.0.19042.1645]
(c) Microsoft Corporation. All rights reserved.

C:\Users\1010101>keytool -import -trustcacerts -alias apacheDSLdap
 -file "C:\path-to-cert\publicApacheLdap.cer":acerts"
 -keystore "C:\path-to-java\jre\lib\security\cacerts"
```

Secure Device Communications

VoiceConsole offers an option in creating device profiles to use Secure Sockets Layer (SSL) communications between VoiceConsole and Honeywell Voice devices.

Communication Protocols with Devices

VoiceConsole contains a parameter for selecting a secured or non-secured protocol for device communications. If you plan to use SSL-secured communications between VoiceConsole and the devices worn by technicians, you must select the HTTPS option in this field. The default setting is HTTP.

1. In **Device Management**, navigate to **Device Profiles**.
2. Click **Create new device profile**.
3. Complete the required fields in the device profile wizard.
4. On the **Configure Profile** page of the wizard, open the **Network Configuration** tab.
5. Select the appropriate protocol from the **Device to Console Communications** drop-down list.
6. Before finishing the device profile, ensure that you have included all required parameters. You cannot edit settings in a device profile once it has been created.

Date/Time Considerations for Secured Communication

When a Honeywell Voice device powers up, it attempts to contact an instance of VoiceConsole on the wireless network. If VoiceConsole is configured for SSL-secured communications, it has an HTTPS certificate installed with a specific expiration date. The date/time on the device must fall within the date range of the certificate; if it does not, the connection to VoiceConsole fails.

On an initial boot of the device or the first time that a device powers up after being unused and uncharged for a long period of time, it does not have a date/time history to make that first connection with VoiceConsole. Instead, the device attempts to obtain the current date/time from the Microsoft time server, `time.windows.com`, by default. If your network does not allow access to the default time server, configure a Network Time Protocol (NTP) server on your VoiceConsole server or elsewhere on your wireless network.

The time from the NTP server should be close enough to VoiceConsole time that the certificate allows the device connection. When the device successfully contacts VoiceConsole, it obtains the remaining time information that it needs to function for inspection assignments - the VoiceConsole date/time, if daylight saving time is in effect or not, and the time zone.

Enabling Network Time Protocol in a Device Profile

1. In the VoiceConsole **Device Management** tab, navigate to **Device Profiles**.
2. Click **Create new device profile**.
3. Complete the required fields in the device profile wizard.
4. On the **Configure Profile** page of the wizard, open the **Network Configuration** tab.
5. Check the **Enable NTP Client** checkbox.
6. If your network restricts internet access, replace the default server (`time.windows.com`) with the address of your local NTP service.

Before finishing the device profile, ensure that you have included all required parameters. You cannot edit settings in a device profile once it has been created.

> **TIP**
> If you power up a Honeywell Voice device that cannot match the certificate date and connect to VoiceConsole, you must perform a device profile load with a serial cable. See VoiceConsole online help at www.help.honeywellaidc.com.for more information.

CHAPTER 10

CONFIGURE VOICECONSOLE LOGS

The Logs page in the **Administration** tab of a VoiceConsole On Prem deployment user interface displays several types of logs. Logs track user activities in the application and are useful for analyzing unexpected issues. Many of the logs listed on this page are generated by Apache Tomcat. In most cases, you do not need to reference these logs.

These logs are configured using `log4j2` (learn more at https://logging.apache.org/log4j/2.x/).

- **VoiceConsole.log**: Contains INFO, WARN, ERROR, and FATAL level messages that result from device communication or user actions.
- **VoiceConsole.err**: Contains a subset of the VoiceConsole log. It contains all information logged at a level ERROR or more critical.

Log Count and Maximum Size

By default, a VoiceConsole On Prem deployment keeps up to 30 active log files and 30 archived log files. For current versions, the default maximum size for **VoiceConsole.log** is 250 MB. The **VoiceConsole.err** log file remains at 4 MB. You can increase the number or size of the log files if necessary.

To change the log size and count for **VoiceConsole.log** and **VoiceConsole.err**, perform the following steps.

1. Stop the VocollectWebApplicationsVC service.
2. Find the logging configuration file at *InstallationLocation*\Vocollect\VoiceConsole\tomcat\webapps\VoiceConsole\WEB-INF\classes\log4j2.xml.
3. Open **log4j2.xml** in a text editor.
4. Modify the applicable log size and rollover count values in **log4j2.xml** as shown below.

```
VoiceConsole.log parameters for logs
log4j.appender.voc.MaxFileSize=250MB
log4j.appender.voc.MaxBackupIndex=30


VoiceConsole.log parameters for archived logs
```

```
log4j.appender.voc.MaxArchiveFileSize=250MB
log4j.appender.voc.MaxArchiveBackupIndex=30


VoiceConsole.err parameters for logs
log4j.appender.voc_err.MaxFileSize=4MB
log4j.appender.voc_err.MaxBackupIndex=10


VoiceConsole.err parameters for archived logs
log4j.appender.voc_err.MaxArchiveFileSize=4MB
log4j.appender.voc_err.MaxArchiveBackupIndex=10
```

The log size and rollover count values should not exceed the space available where the logs are stored.

5. Save your changes.
6. Restart the VocollectWebApplicationsVC service.

Log Location

The location of **VoiceConsole.log** and **VoiceConsole.err** is specified during installation.

To change the log location at any time after installation, perform the following steps.

1. Stop the VocollectWebApplicationsVC service.
2. Find the logging configuration files at *InstallationLocation*\\Vocollect\\VoiceConsole\tomcat\webapps\VoiceConsole\WEB-INF\classes.
3. Open **log4j2.properties** in a text editor.
4. Modify the **system.log.directory** value.

```
system.log.directory=C:\\Program Files\\Vocollect\\VoiceConsole\\Logs
```

5. Save your changes.
6. Open **log4j2.xml** in a text editor.
7. Modify the **applicationLogs** value.

```
applicationLogs=C:\\Program Files\\Vocollect\\VoiceConsole\\Logs
```

8. Save your changes.
9. Restart the VocollectWebApplicationsVC service.

Device Logs

The **View Device Logs** list shows all log files for the devices in the site that you are currently viewing. From this list, you can click the name of a log file to view details about it. The log files show the latest activity first. If you want to view a device log in reverse order: on the **View Device Log** page, click **Show log in reverse order**.

You enable and disable logging on the **Edit Device** page. (See Enable and Disable Device Logging.)

> NOTE
> Active devices logs can only be cleared and not deleted.

You can sort/filter the list to find snapshot logs associated with a particular operator. Searching VoiceConsole for the operator also returns a list of associated snapshot log files.

The name associated with a log file is static and is not updated if you change the operator name. For example, if you change the operator name from "Bob" to "Robert", searching for "Robert" does not return the log files associated with "Bob".

Search results are limited to the sites to which a user has access.

File Name

Name of the log file. This file name is either the timestamp when VoiceConsole received the log file or the name assigned to the log file by the originating device.

Log Type

The type of log generated. There are four possible types of logs:

Standard: General troubleshooting log enabled through VoiceConsole.

Snapshot: A log initiated by the operator from the device.

Crash Dump: A log generated when the device stops functioning prematurely.

Dialog: A log stored that stores the dialog displayed in the dialog display window as part of the dialog display feature.

Size (Bytes)

The size of the log file in bytes.

Device Name

Name of the device that was logged. You can click the device's name to see its properties.

Operator Name

The name of the operator that was loaded onto the device when the log was generated. This field is blank for Standard logs.

Start Time

When the device logging started.

Stop Time

When the device logging stopped.

Duration

Length of time that the device was logged.

Description

> NOTE
> This feature is not available in DWS Mode.

Android devices running a DevKit based application can send a description in the log file. That information is displayed here.

Enable and Disable Device Logging

When logging is enabled for a device or devices, each device sends log messages to the application. The messages can be used to obtain additional information about the device and troubleshoot potential problems. If any devices sent crashdump files, they are also be shown in this section.

> NOTE
> There may be a delay between the time that you enable or disable logging for a device and when the device is actually able to start or stop logging. The **Logging State** field displays if logging is enabled, disabled, starting, or stopping.

Enable and Disable Device Logging for One Device

1. From **VoiceConsole**, select **Device Management**.
2. Under **Navigation**, click **Devices**.

3. On the **Device View** list, select the device for which you want to enable or disable logging.
4. Under **Device Actions**, select **Manage devices** > **Edit selected device**.
   The **Edit Device** page opens.
   You can also select the device and select **Manage devices** > **Enable logging for selected devices**.
5. From the **Logging Enabled** drop-down list: if you want to enable logging, choose **Enabled**. Choose **Disabled** from the drop-down list to disable logging.
6. From the **Logging will stop after** drop-down list, select how long logging should be enabled.
7. For VoiceConsole On Prem deployment, if you want to start logging again after the current logging session expires, activate the **Restart logging after this logging stops?** check box.
   A new log file is generated for each logging session.

   > NOTE
   > The option to restart logging after logging stops can be disabled in System Configuration. If this option is not present in an On Prem deployment it has been disabled.

8. Click **Save Changes**.

Enable and Disable Device Logging for Multiple Devices

> CAUTION
> Logging multiple devices at the same time may affect system performance. The limit for devices logging defaults to ten. Set the **Maximum Simultaneous Logging Devices Allowed** on the page.

Logging multiple devices at the same time may affect system performance.

VoiceConsole On Prem deployment customers can use the **Maximum Simultaneous Logging Devices Allowed** parameter to limit the number of logging devices.

> WARNING
> Increase **Maximum Simultaneous Logging Devices Allowed** with caution.

To enable logging for multiple devices:

1. From **VoiceConsole**, select **Device Management**.
2. Under **Navigation**, click **Devices**.
3. On the **View Devices** list, select the devices for which you want to enable logging.
4. Under **Device Actions**, select **Manage devices** > **Enable logging for selected devices**.
   The **Enable logging** window displays.

5. From the **Logging will stop after** drop-down list, select how long logging should be enabled.
6. For VoiceConsole On Prem deployment, if you want to start logging again after the current logging session expires, activate the **Restart logging after this logging stops?** check box. A new log file is generated for each logging session.

> **NOTE**
> The option to restart logging after logging stops can be disabled in System Configuration. If this option is not present in an On Prem deployment it has been disabled.

7. Click **Yes, enable logging for selected devices**.

To disable logging for multiple devices:

1. From **VoiceConsole**, select **Device Management**.
2. Under **Navigation**, click **Devices**.
3. On the **Device View** list, select the devices for which you want to disable logging.
4. Under **Device Actions**, select **Manage devices > Disable logging for selected devices**. The **Disable logging** window displays.
5. Click **Yes, disable logging for selected devices**.

Enabling and Disabling Device Logging for Devices in Device Groups

> **CAUTION**
> Logging multiple devices at the same time may affect system performance. The limit for devices logging defaults to ten. Set the **Maximum Simultaneous Logging Devices Allowed** on the page.

To enable logging for devices in device groups:

1. From **VoiceConsole**, select **Device Management**.
2. Under **Navigation**, click **Device Groups**.
3. On the **View Device Groups** list, select the device group or groups for which you want to enable logging.
4. Under **Device Group Actions**, select **Manage device groups** > **Enable logging for selected device groups**.
   The **Enable logging** window displays.
5. From the **Logging will stop after** drop-down list, select how long logging should be enabled.
6. For VoiceConsole On Prem deployment, if you want to start logging again after the current logging session expires, activate the **Restart logging after this logging stops?** check box. A new log file is generated for each logging session.

> **NOTE**
> The option to restart logging after logging stops can be disabled in System Configuration. If this option is not present in an On Prem deployment it has been disabled.

7. Click **Yes, enable logging for selected device groups**.

To disable logging for devices in device groups:

1. From **VoiceConsole**, select **Device Management**.
2. Under **Navigation**, click **Device Groups**.
3. On the **Device Groups View** list, select the device groups for which you want to disable logging.
4. Under **Device Actions**, select **Manage devices** > **Disable logging for selected devices**.
   The **Disable logging** window displays.
5. Click **Yes, disable logging for selected device groups**.

View Device Logs

> **NOTE**
> Because there can be quite a bit of information in a standard device log session, crashdump, or snapshot, that information is broken up into separate pages. The most recent data always appear first.

View a Logging Session for a Particular Device

1. From **VoiceConsole**, select **Device Management**.
2. Under **Navigation**, click **Devices**.
3. In the **View Devices** list, select the device for which you want to view logs.
4. Under **Device Actions**, select **View selected device**.
   The **View Device** page opens.
5. In the **logging** section, click the name of the device log file you want to view.
   The **View Log** page appears.

> **NOTE**
> If you want to view a device log in reverse order, click the **Show log in reverse order** action.

View All Standard Logs for a Particular Device

1. From **VoiceConsole**, select **Device Management**.
2. Under **Navigation**, click **Devices**.
3. In the **View Devices** list, select the device for which you want to view logs.
4. Select **View selected device**.
   The **View Device** page opens.
5. In the **logging** section, click **All Logs for This Device**.

View All Device Logs for a Site

1. From **VoiceConsole**, select **Device Management**.
2. Under **Navigation**, click **Device Logs**.
   The **View Device** Logs list displays showing all of the device logs for the site.
3. Select the device log for which you want to view logs.
4. Under **Device Log Actions**,select **View selected device log**.

The **View Device Log** page displays the following fields:

File Name

Name of the log file. This file name is either the timestamp when VoiceConsole received the log file or the name assigned to the log file by the originating device.

Log Type

The type of log generated. There are four possible types of logs:

Standard: General troubleshooting log enabled through VoiceConsole.

Snapshot: A log initiated by the operator from the device.

Crash Dump: A log generated when the device stops functioning prematurely.

Dialog: A log stored that stores the dialog displayed in the dialog display window as part of the dialog display feature.

Size (Bytes)

The size of the log file in bytes.

Device Name

Name of the device that was logged. You can click the device's name to see its properties.

Operator Name

The name of the operator that was loaded onto the device when the log was generated. This field is blank for Standard logs.

Start Time

When the device logging started.

Stop Time

When the device logging stopped.

Duration

Length of time that the device was logged.

Description

> NOTE
> This feature is not available in DWS Mode.

Android devices running a DevKit based application can send a description in the log file. That information is displayed here.

Delete Device Logs

> NOTE
> Active Logs can only be cleared and not deleted.

1. From **VoiceConsole**, select **Device Management**.
2. Under **Navigation**, click **Device Logs**.
3. In the **View Device Logs** list, select the device logs that you want to delete.
4. Under **Device Log Actions**, select **Delete selected device logs**.
5. In the **Delete Confirmation** pop-up, click **Delete device logs**.

Clear Device Logs

You can clear a device log for active log files. This deletes all the information in the active log file, but retains the file so that new information can be written to it.

1. From **VoiceConsole**, select **Device Management**.
2. Under **Navigation**, click **Device Logs**.

3. In the **View Device Logs** list, select the device logs that you want to clear.
4. Under **Device Log Actions**, select **Clear selected device logs**.
5. In the **Clear Confirmation** dialog box, click **Clear device log**.

Download Device Logs

1. From **VoiceConsole**, select **Device Management**.
2. Under **Navigation**, click **Device Logs**.
3. In the **View Device Logs** list, select the device logs that you want to download.
4. Under **Device Profile Actions**, select **Download selected device logs**.

> **NOTE**
> If you chose to download the device log to which a device is currently logging, the exported file contains all of the data captured for that log up until the export link was clicked.

Voice Log Analyzer

> **NOTE**
> This feature is not available in DWS Mode.

The Honeywell Voice Log Analyzer is an application that extracts and displays data from VoiceCatalyst, VoiceClient, and GWS Connector Android device log files.

The Log Analyzer can be accessed by:

1. From **VoiceConsole**, select **Device Management**.
2. Under **Navigation**, click **Device Logs**.
3. Under **Device Log Actions**, select **Log Analyzer**.

For more details see the Voice Log Analyzer User Guide.

CHAPTER 11

INCREASE VOICECONSOLE MEMORY MANUALLY

> **NOTE**
> A best practice is to restart the application from time to time, especially in large clustered deployments, to prevent out of memory errors.

There may be situations where the memory that VoiceConsole On Prem deployment uses need to be increased, such as when you want to import a VoiceClient with many languages.

Increase Memory in Windows

1. Navigate to *InstallLocation*\VoiceConsole\tomcat\bin.
2. As an administrator, if available, run the `VocollectWebApplicationsVCw.exe` file.
   The **VocollectWebApplicationsVC Properties** window opens.
3. On the Java tab, enter the desired value in the **Maximum memory pool** field.
4. Click **Apply**.
5. Restart the VocollectWebApplicationsVC service.

Increase Memory in Linux/Unix

1. Navigate to *InstallLocation*\VoiceConsole\tomcat\bin.
2. Edit the setenv.sh file by finding where -Xmx is defined for `JAVA_OPTS` and changing the value.
3. Save the file.
4. Restart the VocollectWebApplicationsVC service.

CHAPTER 12

DATA PROTECTION

This section contains some procedures you can follow to protect your data and what to do if your VoiceConsole installation becomes unresponsive or shuts down unexpectedly.

> **IMPORTANT**
> Honeywell strongly recommends having your IT staff develop and implement a disaster recovery plan specific to your company's needs.

Backing Up and Restoring the Database

Honeywell strongly recommends that you schedule regular database backups. If a disaster occurs in which the database is corrupted or no longer available, you can restore a previous backup to use.

During installation, you were prompted for the database JDBC URL. This is the database that you should mark to be backed up. Refer to the documentation provided by Oracle or Microsoft for information on how to back up and restore your database.

For detailed procedures on how to back up the various types of databases, see Back Up and Restore the VoiceConsole Database.

Application Redundancy

The ability to failover the application server is also an option. You can install an instance of the VoiceConsole application server installed on multiple machines, all configured to communicate with the same database. This configuration works with two or more application server nodes. In this configuration, the database is the single point of failure.

VoiceConsole can also be configured to be on a single application server that communicates with a database that has been clustered, meaning that the database has multiple nodes acting as a single interface for the common underlying database.

In the case of Microsoft SQL Server, the database nodes are given a single interface for the JDBC connection string. In the case of Oracle, multiple database application nodes are connected to a common underlying database structure, and the JDBC connection string contains a multiple host listing. If a database node fails, either the Oracle JDBC thin client or the Windows SQL Server management utility would automatically switch to a new connection to the appropriate database server.

If a VoiceConsole On Prem Deployment Becomes Unresponsive or Shuts Down Suddenly

Save the Log Files

The first thing that you should do if a VoiceConsole On Prem deployment becomes unresponsive is to save all of the VoiceConsole log files because Honeywell may need them to properly troubleshoot the situation. By default, the log files are stored in:

- Windows: C:\Program Files\Vocollect\VoiceConsole\Logs or C:\Program Files (x86)\Vocollect\VoiceConsole\Logs
- Red Hat Linux, SUSE Linux, and CentOS Linux: /opt/Vocollect/VoiceConsole/Logs

Stop and Restart the Service

Stop and restart the VoiceConsole 6.6 service as follows:

Windows

1. Click the **Start** button, and select **Settings** > **Control Panel**.
2. Double-click **Administrative Tools**.
3. Double-click **Services**.
4. In the **Services** window, locate VoiceConsole Service.
5. Stop and restart the service.

Red Hat Linux, SUSE Linux, and CentOS Linux

Type the following:

```
/bin/sh /etc/init.d/VocollectWebApplicationsVC start
/bin/sh /etc/init.d/VocollectWebApplicationsVC stop
/bin/sh /etc/init.d/VocollectWebApplicationsVC restart
```

If this is unsuccessful, shut down and restart the machine hosting the server, and verify that VocollectWebApplicationsVC service successfully started. You should also verify that the database is up and available.

CHAPTER 13

UNINSTALL VOICECONSOLE ON PREM DEPLOYMENT

- The VoiceConsole service stops automatically during this process.
- If you are uninstalling an instance of VoiceConsole that was installed in a clustered server environment, the uninstaller does not remove files from the shared files directory. To completely remove VoiceConsole, delete all log and firmware files from the shared directory.

Special Instructions for VoiceConsole 6.2 and Later

1. Deactivate all licenses before VoiceConsole unistallation.
2. Contact Technical Support for assistance in uninstalling VoiceConsole 6.2 and later.

Uninstall VoiceConsole On Prem Deployment for Windows

1. With administrator privileges, run the uninstall.bat file at *InstallDirectory/*Uninstaller.
   The uninstall application opens and verifies the uninstall.
2. Click **Uninstall**.
   A command window displays, and the uninstall begins. Do not close the window until the uninstall is complete.
   The VoiceConsoleOn Prem deployment is uninstalled, and all data removed.
3. When the uninstall process is finished, click **Quit**.

> IMPORTANT
> The Windows uninstall feature from **Add or Remove Programs** does not perform a complete uninstall of VoiceConsole.

Uninstall a VoiceConsole On Prem Deployment for Linux

1. With root privileges, run the uninstall.sh file at *InstallDirectory/*Uninstaller.
   The uninstall application opens and verifies the uninstall.
2. Click **Uninstall**.
3. When the uninstall process is finished, click **Quit**.
   The VoiceConsole On Prem deployment is uninstalled, and all data removed.

Uninstall in a Clustered Environment

Follow the appropriate process above for Windows or Linux.

Perform a Silent Uninstall

If a VoiceConsole On Prem deployment was installed or upgraded using a silent installation, Honeywell recommends that you uninstall the application by running the silent_uninstall.bat file (for Windows installations) as an administrator or the silent_uninstall.sh file (for Linux installations) with root privileges located at *InstallDirectory/*Uninstaller.

APPENDIX A

VOICECONSOLE ON PREM DEPLOYMENT IMPLEMENTATION CHECKLIST

The following is a checklist of information that you must obtain or decisions that you must make before installing a VoiceConsole On Prem deployment.

Basic System Information	
Server Operating System	Before installing VoiceConsole on a Windows server, download and install the Microsoft Visual C++ Redistributable from the Microsoft website. • Microsoft Windows Server 2025 • Microsoft Windows Server 2022 • Microsoft Windows Server 2019 • Microsoft Windows Server 2016 • Red Hat Enterprise Linux 9 • Red Hat Enterprise Linux 8 • SUSE Linux Enterprise Server (SLES15) 64-bit • Ubuntu 22.04 • Ubuntu 24.04
Client Operating System	• Microsoft Windows 11 • Microsoft Windows 10 • Red Hat Linux Workstation ES for Intel processors
Browser	• Microsoft® Edge • Mozilla® Firefox® 4.x and newer • Google® Chrome

Personnel - Provide the Name and Phone Number for Each	
Your Database Administrator	Name: Phone:
Your System Administrator	Name: Phone:
Voice Champion	Name: Phone:
Warehouse Supervisor	Name: Phone:

Pre-Implementation Information
Total devices for each VoiceConsole On Prem Deployment Server
Server Requirements
Bandwidth Requirements

Database Information	
Relational Database Management System	• Microsoft SQL Server 2019 Express • Microsoft SQL Server 2019 Standard • Microsoft SQL Server 2022 Express • Microsoft SQL Server 2022 Standard • Microsoft SQL Server 2025 Standard • Oracle Database 19c • Oracle Database 21c • Oracle Database 21c Express Edition (XE)
Hostname of Database Server	
Port Number for Database	
Database Administrator Username and Password	
JDBC URL: **Oracle Example:** jdbc:oracle:thin:@localhost:1521:VC **SQL Example:** jdbc:sqlserver://localhost:1433;DatabaseName=VC	

Multi-site Information
Total Number of Sites
Total Number of Devices
Number of Devices per Site
Shift Size
Shift Startup Times per Site

Clustered Server Information	
The logical hostname of the application server and/or database server cluster	
The shared location of the device log and firmware files	

Installation Information	
Windows User with Administrator Privileges *OR* Red Hat Linux/CentOS Linux	
Hostname for the VoiceConsole On Prem Deployment	
Time for the VoiceConsole On Prem Deployment to Perform Database Maintenance	
Directory into which the VoiceConsole On Prem Deployment Should Be Installed	

Security	
Encryption	WEP WPA WPA-2
Authentication	PSK EAP
HTTPS (optional)	Signed Certificate Tomcat configured

Security	
EAP Type (If using EAP)	EAP-TLS EAP-TTLS/MSCHAPv2 PEAPv0/EAP-MSCHAPv2 PEAPv1/EAP-GTC LEAP
Association Type	Site Based Device Based Operator Based

LDAP settings are optional for site- and device-based association types. They are required for the operator-based association type. If you choose to use LDAP, you also need the following:

LDAP Settings
Use SSL (Yes or No)
Host
Port
Search User Distinguished Name
Search User Password
Search Base
Searchable Attribute
Password Attribute

APPENDIX

B VOICECONSOLE DATABASE MIGRATOR

VoiceConsole 6.6 does not support an embedded database. Attempting to upgrade to VoiceConsole 6.6 from an earlier version with an embedded database results in the upgrade installation being blocked.

Use this tool to migrate data from an existing instance of VoiceConsole that uses an embedded database to prepare for a VoiceConsole 6.6 installation. This tool supports database migration from VoiceConsole 5.6.2, 5.6.3, and 6.1.

VoiceConsole upgrades from 6.2.1 can skip this database migration as it was required during the 6.2.1 installation.

1. Install a database. The following options are recommended to replace the embedded database in deployments with 300 or fewer devices:
    - Microsoft SQL Server 2019 or 2022 Express
    - Oracle Database 21c Express Edition
2. Open the VoiceConsole Database Migrator tool.
3. In the **Source** section, use the **VoiceConsole Home** box to enter or browse to the VoiceConsole installation directory.
4. Click **Test Connection**. If successful, the tool displays the VoiceConsole version found.
5. In the **Target** section, complete the following entries as required for the selected database. For additional information, refer to the database installation instructions above. The items below assume the default configuration for the new database.

a. For Microsoft SQL Server:

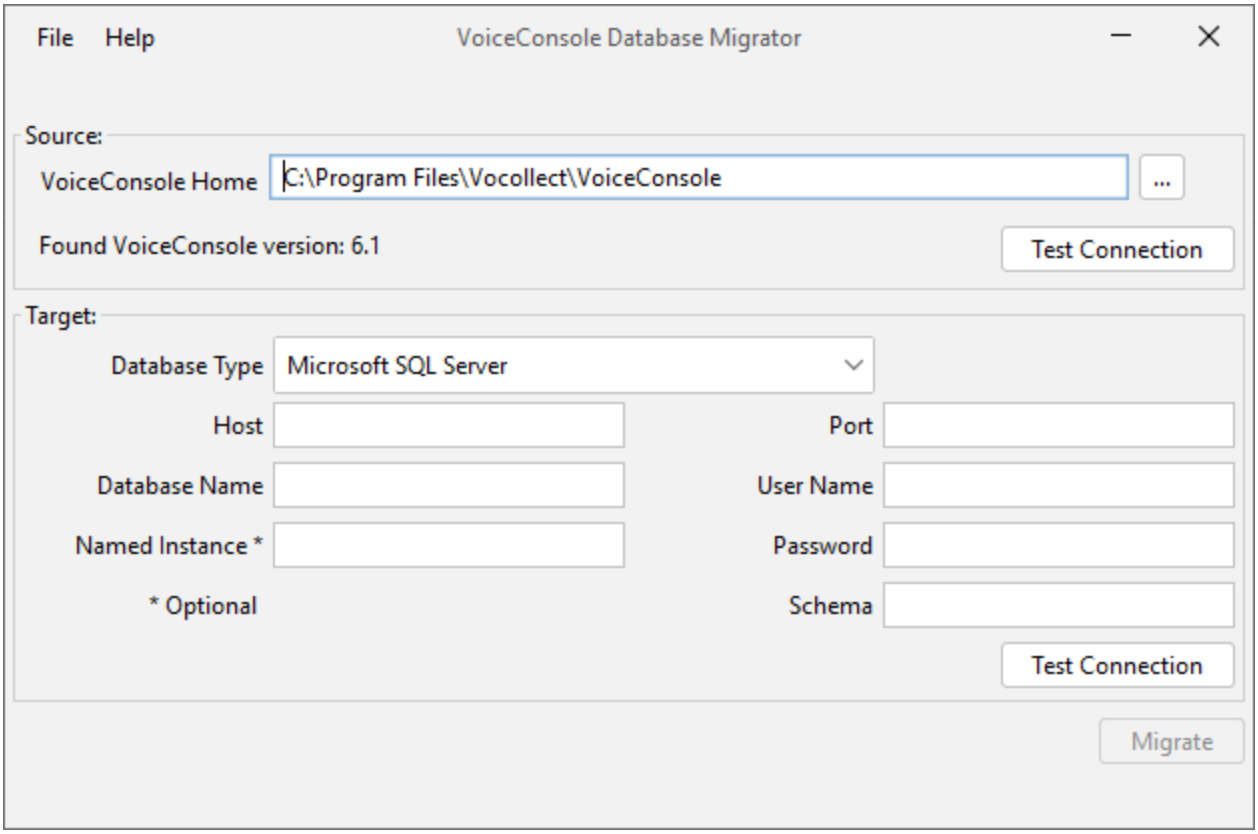

- **Database Type**: Microsoft SQL Server
- **Host**: localhost\SQLExpress
- **Port**: 1433
- **Database Name**: Enter the name given to the new database in SQL Server Management Studio
- **Named Instance**: Optional, leave blank if not used
- **User Name**: Enter the username for the new login created in SQL Server Management Studio
- **Password**: Enter the password for the new login created in SQL Server Management Studio
- **Schema**: DBO

b. For Oracle:

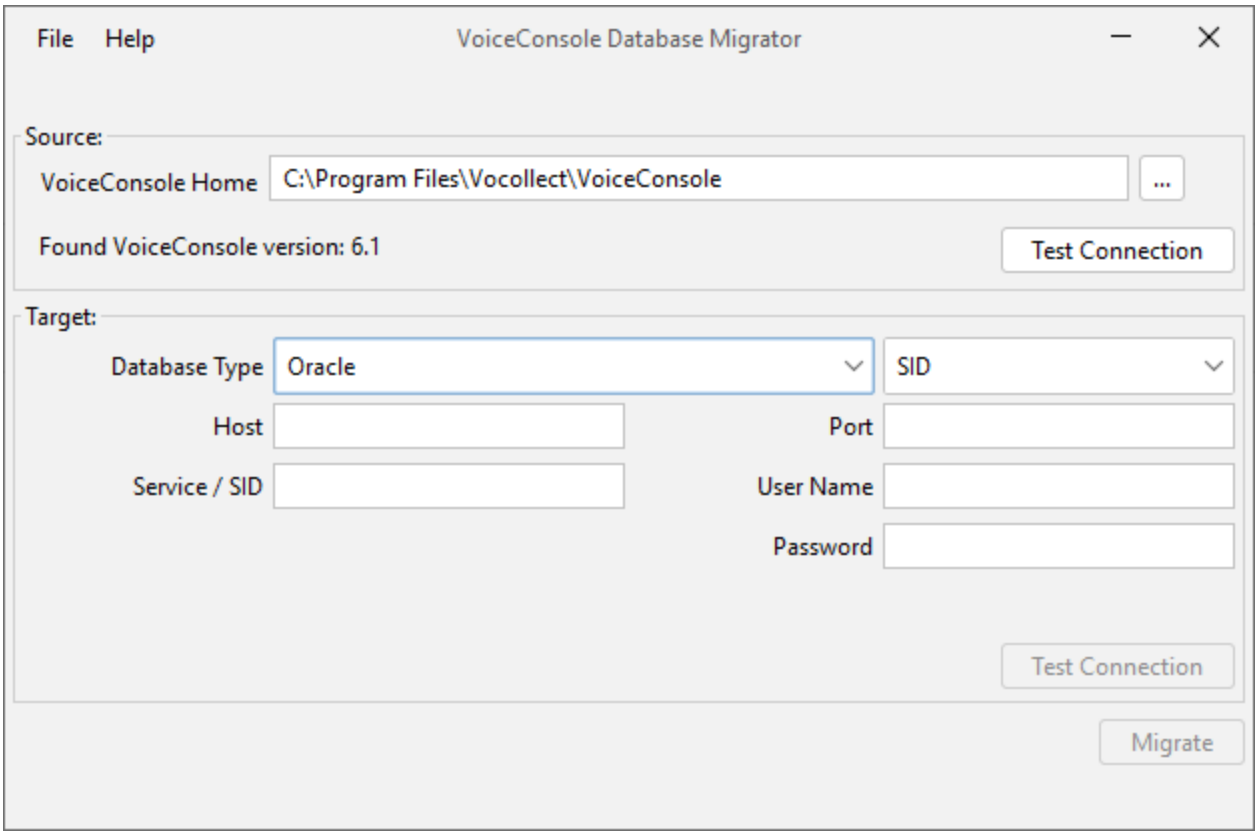

- **Database Type**: Oracle, Service Name
- **Host**: IP address of server
- **Port**: 1521
- **Service/SID**: This entry depends on the Database Type selection, xepdb1 (Service Name) or the SID for the Oracle database (SID)
- **User Name**: Enter the USER_NAME assigned in the Oracle command process.
- **Password**: Enter the PASSWORD assigned in the Oracle command process.

6. Click **Test Connection**.
7. If the tool successfully connects to the database, confirm that the empty database is to be populated with tables for the displayed version of VoiceConsole.
   - If you are using an Oracle database and the following is displayed "Error checking if target database is empty", return to the configuration and select **SID** instead of **Service Name** from the pull down after Database Type. Enter the SID in the **Service/SID** field and click the **Test Connection** button.
8. Click to proceed with the migration. Data is copied from the source database to the target. Constraints and indexes are created.
9. Acknowledge the migration complete prompt.

10. The following files are created in the output folder:
    - database.properties
    - configProperties.json
11. Stop VoiceConsole.
12. Make a backup of the files below, then replace with the files from the output folder:
    - <*VoiceConsole installation directory*>\conf\current\configProperties.json
    - <*VoiceConsole installation directory*>\tomcat\webapps\VoiceConsole\WEB-INF\classes\database.properties
13. Restart VoiceConsole.
14. Perform update to VoiceConsole 6.6.

APPENDIX

C

SET UP RAPIDSTART

VoiceCatalyst 1.2 and newer support the use of RapidStart, an automated audio-visual training application that guides new employees on how to use the voice system and follow best practices, and enables operators to train templates using smartphones or tablets without the need for a dedicated training device such as the QTerm. The RapidStart task file is provided on the VoiceCatalyst 1.2 and newer distributions, pre-configured to connect to a Bluetooth-enabled display device.

The application should be accessible using the browser on a smartphone, tablet, laptop, or PC. High-level testing has been performed on iPhone, iPad, and several Android devices, but Honeywell strongly recommends testing your configuration before deploying in a production environment.

For optimal performance when using a smartphone or tablet, the device should have a touch screen with a minimum resolution of 320 x 240.

For details, see VoiceCatalyst 1.2 or newer release notes.

1. Import the RapidStart task file, RapidStart*version*.vad, into VoiceConsole from the VoiceCatalyst distributions.
2. Create a task package from the RapidStart task.

   > **NOTE**
   > You only need to perform these first two steps once. Perform the remaining steps each time you want to train a new user.

3. In VoiceConsole, create the new operator and associate with that user the task package to be used to do work on a regular basis.
4. Load the training task to a Honeywell Voice device running VoiceCatalyst 1.2 or newer.
5. Load the operator to the Honeywell Voice device.
6. Connect the device to the same network as the Honeywell Voice device, and enter the IP address of the Honeywell Voice device or the hostname (in the form of vv-*deviceserialnumber*) in your browser address bar.
7. Connect a headset to the Honeywell Voice device.
8. Hand the Honeywell Voice device, display, and connected headset to the operator, and ask the operator to push the yellow Play/Pause button to begin using RapidStart.

APPENDIX D

MULTI-SERVER / MULTI-SITE VOICECONSOLE AND VOICELINK IMPLEMENTATION

Time Zone Considerations

It is important to consider time zones in any implementation where VoiceLink and VoiceConsole On Prem deployment are installed on different servers and where multiple sites are set up in both VoiceLink and VoiceConsole On Prem deployment.

Time zones affect the time stamps that are recorded for VoiceLink and VoiceConsole On Prem deployment activity.

- **Actions performed by device operators**: The time zone is defined by the VoiceConsole On Prem deploymentsite with which each device is associated. Therefore, time stamps in device messages are set according to the time zone on the VoiceConsole On Prem deployment server.
- **Actions performed by VoiceConsole users**: The time stamps are set by the VoiceConsole On Prem deploymentserver.
- **Actions performed by VoiceLink users**: The time stamps are set by the VoiceLink server

Both VoiceConsole On Prem deployment and VoiceLink have rules about when certain actions can be performed. If time stamps differ - due to either of the scenarios described below - it can cause unexpected errors.

- **Multi-Server Implementations**: In implementations where VoiceConsole On Prem deployment and VoiceLink are installed on different servers, it is important to ensure that the time on these servers is synced. This is not an issue if VoiceConsole On Prem deployment and VoiceLink are installed on the same server. However, if you install VoiceConsole On Prem deployment and VoiceLink on different servers, then you must ensure that these servers are synced to the same time.
- **Multi-Site Implementations**: When you set up a site in VoiceConsole On Prem deployment and VoiceLink, you must specify the time zone where that site is located. You must ensure that the same time zone is specified for a site in both applications. You are not required to specify the same site name; however, Honeywell recommends that you use the same site name for simplicity. Once your sites are set up in both applications, you have to load a device profile for each site.

Working with Tasks in Multi-Site Implementations

VoiceLink is designed to work with either TaskBuilder-created tasks or VoiceArtisan-created tasks. This section addresses VoiceLink implementations using either type of task. See separate

documentation included in your product package for information on deploying voice application software to multiple sites.

Working with VoiceArtisan-Created Tasks in Multi-Site Implementations

Perform the following procedure:

1. Navigate to the location where the task files were copied as per VoiceLink post-installation procedures.

   > **NOTE**
   > For most customer implementations, either tasks written in TaskBuilder or tasks written in VoiceArtisan are used exclusively. If your implementation uses both, both types can be installed.

2. In VoiceConsole On Prem deployment, create a new task package and select to Import New Task from the **Name** drop-down list on the **Select Task** page.
3. On the **Set Values** page on the **Task Settings** tab, enter the site for which you are creating the task package in the **Site Name** field.

   > **NOTE**
   > If the **Site Name** field is not available, you cannot perform this process.

4. Complete the task package creation process.
5. Repeat the previous three steps for each site that you are supporting.

Working with TaskBuilder-Created Tasks in Multi-Site Implementations

When using multiple sites in VoiceLink with task software, each site needs to have its own **tasksite.txt** file that contains that site's name within the task package. This file then needs to be imported into VoiceConsole On Prem deployment as part of a task.

Perform the following procedure:

1. Navigate to the location where the task software files were copied as per VoiceLink post-installation procedures.

   > **NOTE**
   > For most customer implementations, either tasks written in TaskBuilder or tasks written in VoiceArtisan are used exclusively. If your implementation uses both, both types can be installed.

2. Create a zip file of all the files in that directory, and provide a name for the zip file (for example, "Default.zip".)
3. For each non-default site that you are supporting, perform the following steps:
   - Using a text editor, open the tasksite.txt file, and change the site name listed there (for example, from "Default") to the name of the site that you are using (for example,

"Site1".)

- Save the file, retaining the original file name (tasksite.txt).
- Create another zip file of all the files in the directory, and name the zip file based on the site name (for example, "Site1.zip".)
- In VoiceConsole On Prem deployment, create a new task package, and select to **Import New Task** from the **Name** drop-down list on the **Select Task** page.

> NOTE
> When this task is imported into VoiceConsole On Prem deployment, it has a number appended to it. When creating the task packages for the respective sites, you need to select the version of the task that was imported for the given site. For example, when Default.zip is imported, VoiceConsole On Prem deployment contains a task named *VoiceApplications311*. When Site1.zip is imported, VoiceConsole On Prem deployment has another task named *VoiceApplications311 2*.

- Browse for and upload the site-specific zip file to complete the task import process.
- Complete the task package import process.

Creating Additional Sites in VoiceConsole On Prem Deployments for Multiple Site Implementations

To support multiple site implementations, several steps need to be taken within VoiceConsole On Prem deployment and within VoiceLink. The VoiceConsole On Prem deployment steps are documented below and must be performed first.

The VoiceConsole On Prem deployment steps that you must perform to create additional sites in VoiceConsole On Prem deployment when VoiceLink is also implemented are:

- Create site-specific task files for each site
- Create a new site in VoiceConsole On Prem deployment
- Create a site-specific user in VoiceConsole On Prem deployment
- Migrate operators from an existing VoiceConsole On Prem deployment database
- Import a task to the new site
- Create a task package for the new site
- Create a device profile for the new site

Each step is described in the following subsections.

> NOTE
> You need to verify that your license supports the number of operators that you are adding.

Creating Sites

1. Log into VoiceConsole On Prem deployment as an administrator.
2. In the **Administration** section under **Administration**, click **Sites**.
3. Under **Site Actions**, select **Create new site**. The **Create Site** page opens.
4. Enter the site-specific information for the new site.
5. Click the **Create site**.

Creating Site-Specific Task Files

For each site being used, a site-specific task file must be created.

1. Navigate to the task directory in the **Vocollect Tasks** directory, and highlight the task zip file in use.
2. Create a copy of this file (being used in production), and rename it with a meaningful name for each new site to be created.
3. Open the first of the newly created task zip files. Within the zip file, the tasksite.txt file needs to be renamed to "point" to the new site. Initially, all of the tasks have a tasksite.txt file that specifies "DEFAULT".
4. To change the tasksite.txt file, extract the contents of each newly created zip file to a working directory. Open the tasksite.txt file.
5. Edit the tasksite.txt file and change the word "DEFAULT" to the name of the new site. In the example below, the site is named "VAL".
6. Repeat this process for all of the sites that were created.

Creating a Site-Specific User for the Site

You need to create a site-specific administrator who can only view the site to which they are assigned.

1. Click the **Administration** tab, and select the newly created site from the **Site Information** drop down list.
2. Under **Administration**, click **Users**.
3. Under **User Actions**, click **Create new user**. The **Create User** page opens.
4. Enter the Name and Password for the new site administrator.
5. Select **Administrator** in the **Roles** field for the user.
6. Select the one site to which they are granted access in the **Sites** field.
7. Click **Create user**.

Creating a Task Package for the New Site

1. Under **Navigation**, click **Task Packages**.
2. Under **Task Package Actions**, select **Create new task package**.

   The **Select Task** page opens.
3. Create the task package as normal, by providing information in the fields on this page. Consult the VoiceConsole Online Help for more information.
4. Click **Create Task Package**.

> **NOTE**
> Every task package requires that the advanced settings be specified for each new site. Honeywell recommends saving these settings in a separate text document and then pasting them in the advanced settings box at the time of creating the new task package.

Creating a Device Profile for the New Site

1. Click the **Device Management** tab.
2. Under **Navigation**, click **Device Profiles**.
3. Under **Device Profile Actions**, select **Create new device profile**.
4. On the **Select VoiceClient** page, enter a meaningful name for the device profile in the **Profile Name** field.
5. Select the appropriate version of VoiceClient from the drop-down list, and click **Next**.
6. On the **Select Configuration Source** page, click **Next**.
7. On the **Configure Profile** page, enter the applicable settings for wireless security on the **Network Configuration** and **Advanced Settings** tabs.
8. Click **Finish**.

Migrate Operators from an Existing VoiceConsole Database

If implementing a new system, you may not need to perform the steps in this section. The steps below show how to migrate operator templates from an existing VoiceConsole implementation.

1. To move operators from one site to another, click the **Operator Management** tab.
2. Under **Navigation**, click **Operators**.
3. On the **View Operators** page, select the operators that you want to move.

   > **NOTE**
   > You can select multiple operators by using the Shift or Ctrl key when clicking on the individual operator names.

4. Under **Operator Actions**, select **Move Operators** > **Move/Add selected operators to a site**.
5. From the **Destination Site** drop-down list in the **Move/Add selected operators to site** window, select the newly created site.
6. Select **Move the Operator to the selected site**.
7. Click **OK**.

8. Confirm that the operators appear in the new site by switching the **Site Information** drop down list.

Import a Task to the New Site

1. Click the **Device Management** tab.
2. Under **Task Actions**, select **Import Task**.
   The **Select Task File** page opens.
3. Select the **Task File (*.vad, *.zip, *.tas)** radio button.
4. Click **Browse** to navigate to and open the file containing the updated `tasksite.txt` file that you created.
5. Click **Next**. The application analyzes the selected file to determine which files must be imported for the task to function properly.
   The **Select Task Components** page opens, and the appropriate files are displayed in the bottom section of that page.
6. Give the task a meaningful name. For example, append the default task name with the site name as a prefix.
7. Click **Next**.
   The **Select Sites** page opens.
8. Select the sites at which this task is to be available.

   > NOTE
   > VoiceConsole On Prem deployment does not prevent you from selecting a site that differs from the site names in the `tasksite.txt` file; make sure that the correct task and site combination is chosen in this process.

9. Click **Import Task**.

Creating Additional Sites in VoiceLink for Multiple Site Implementations

To support multiple site implementations, several steps need to be taken within VoiceConsole On Prem deployment and within VoiceLink. The VoiceLink steps are documented below. See Creating Additional Sites in VoiceConsole On Prem Deployments for Multiple Site Implementations for the VoiceConsole On Prem deployment steps.

For multiple-site installations of VoiceLink, you must create sites in addition to the singular default site. If you perform this work ahead of time, then once you are implementing VoiceLink on-site, the only requirement left is to load the regions.

Creating Sites

> **NOTE**
> Creating a new site creates the additional import and export directories for the site. See the topic that follows, Running an Import Job for the Site for steps to take to run the import job and import picking data into the new site.

1. Log in as the global administrator of VoiceLink, and select the **Administration** tab.
2. In the left navigation pane, click **Sites**.
3. Under **Site Actions**, click **Create a New Site**.
4. On the **Create Site** page, enter the new site name and site-specific information.
5. Click **Save**. The new site appears in the **View Sites** list.

Running an Import Job for the Site

To view the newly created import directories for the site, the import job must be run. Perform the following steps to run the import job manually.

1. Navigate to the **Administration** tab, and select **Schedules**.
2. Highlight the import job, and click the **Run Selected Job** action link.
3. Use Windows Explorer to navigate to the directory showing the resulting folders created by the job.

> **NOTE**
> Be sure to note and communicate the change in import and export file paths for the new site, especially for import, so that the original site data does not get placed into the new site folder.

Creating a Site-Specific User for the Site

> **NOTE**
> Before creating any users, check the VoiceLink license to verify that your license supports the number of operators being added.

1. To create a site-specific administrator, go to the **Administration** tab, and click the **Users** link in the left navigation pane. The **View Users** page opens.
2. Click the **Create New Login** action link.
3. Enter the new user Name and Password, and click **Save**.

   > **NOTE**
   > Do not use "Admin" as the user name and "Admin" as the password for this site-specific login.

4. On the **Create User** page, enter the Role, Sites, and Status information.
    - For **Role**, select **Administrator**.
    - For **Sites**, select the site that you just created.
    - For **Status**, select **Enabled**.
5. Click **Save** to complete the creation of the user.

For other users who have access to this site, you need to go back to the original site and edit the users so that they have access to view or use this new site.

You should create a workgroup for this site and make it the default. Refer to instructions in the VoiceLink Online Help for more information.

Creating Regions for the Site

Next, you must create the regions to enable the site to import data.

1. In the left navigation pane, select **Regions** from the drop-down menu. The **View Regions** page opens.

    > NOTE
    > If using the site-specific administrator login, the drop-down list of sites (under **Site Information**) does not appear.

2. Click the **Create New Regions** action link.
3. On the **Create Region** page, select the region profile for the new region from the **Normal Profile** drop-down list, and configure the region.
4. Repeat this step for any new regions within the site.

Deleting Sites in VoiceLink

1. Delete the site from the VoiceLink interface.
2. Edit the import.xml and export.xml files, and remove the references to the deleted site; otherwise, the next time the import job runs, the folders are re-created.
    - Find the import.xml file at *VoiceLink install directory*\apache-tomcat-6.0\webapps\VoiceLink\WEB-INF\classes\import-setup.xml

APPENDIX

E MULTI-SERVER / MULTI-SITE VOICECONSOLE AND VOICECHECK IMPLEMENTATION

Time Zone Considerations

It is important to consider time zones in any implementation where VoiceCheck and VoiceConsole On Prem deployment are installed on different servers and where multiple sites are set up in both applications.

Time zones affect the time stamps that are recorded for VoiceCheck and VoiceConsole On Prem deployment activity.

- Actions performed by device operators: The time zone is defined by the VoiceConsole On Prem deployment site with which each device is associated. Therefore, time stamps in device messages are set according to the time zone on the VoiceConsole On Prem deployment server.
- Actions performed by VoiceConsole On Prem deployment users: The time stamps are set by the VoiceConsole On Prem deployment server.
- Actions performed by VoiceCheck users: The time stamps are set by the VoiceCheck server.

Both applications have rules about when certain actions can be performed. If time stamps differ, due to either of the scenarios described below, it can cause unexpected errors.

- **Multi-Server Implementations**: In implementations where VoiceConsole On Prem deployment and VoiceCheck are installed on different servers, it is important to ensure that the time on these servers is synced.
- **Multi-Site Implementations**: When you set up a site in VoiceConsole On Prem deployment and VoiceCheck, you must specify the time zone where that site is located. You must ensure that the same time zone is specified for a site in both applications. You are not required to specify the same site name, but consider using the same name for simplicity. Once your sites are set up in both applications, you can load a device profile for each site.

Working with Tasks in Multi-Site Implementations

> **NOTE**
> This section applies only to a VoiceConsole On Prem deployment.

Perform the following procedure to import the task software and create a task package for each site.

1. Navigate to the voice process software file (.vad).

2. In VoiceConsole On Prem deployment, create a new task package, and select **Import New Task** from the **Name** list on the Select Task page.
3. On the Set Values page on the **Task Settings** tab, enter the site for which you are creating the task package in the **Site Name** field.
4. Complete the task package creation process.
5. Repeat the previous three steps for each site you are supporting.

Creating Additional Sites in VoiceConsole On Prem Deployments for Multiple Site Implementations

> **NOTE**
> This section applies only to a VoiceConsole On Prem deployment.

In order to support multiple site implementations, several steps need to be taken within both VoiceConsole On Prem deployment and VoiceCheck. The VoiceConsole On Prem deployment steps are documented below and must be performed first. See Creating Additional Sites in VoiceCheck for Multiple Site Implementations for the VoiceCheck steps.

The steps you must perform to create additional sites in VoiceConsole On Prem deployment when VoiceCheck is also implemented are:

- Create site-specific task files for each site.
- Create a new site in VoiceConsole On Prem deployment.
- Create a site-specific user in VoiceConsole On Prem deployment.
- Migrate operators from an existing VoiceConsole database.
- Import a task to the new site.
- Create a task package for the new site.
- Create a device profile for the new site.

Each step is described in the following subsections.

> **NOTE**
> You must verify that your license supports the number of operators you are adding.

Creating Sites

1. Log into VoiceConsole On Prem deployment as an administrator.
2. In the **Administration** section, click **Sites**.
3. Under **Site Actions**, select **Create new site**.
   The Create Site page opens.

4. Enter the site-specific information for the new site.
5. Click **Create site**.

Creating Site-Specific Task Files

For each site being used, a site-specific task file must be created.

1. Navigate to the task directory in the Vocollect Tasks directory, and highlight the task zip file in use.
2. Create a copy of this file (being used in production), and rename it with a meaningful name for each new site to be created.
3. Open the first of the newly created task zip files. Within the zip file, the tasksite.txt file needs to be renamed to "point" to the new site. Initially, all of the tasks have a tasksite.txt file that specifies "DEFAULT".
4. To change the tasksite.txt file, extract the contents of each newly created zip file to a working directory. Open the tasksite.txt file.
5. Edit the tasksite.txt file, and change the word "DEFAULT" to the name of the new site. In the example below, the site is named VAL.
6. Repeat this process for all of the sites that were created.

Creating a Site-Specific User for the Site

You need to create a site-specific administrator who can only view the site to which they are assigned.

1. Click the **Administration** tab, and select the newly created site from **Site Information**.
2. Under **Administration**, click **Users**.
3. Under **User Actions**, click **Create new user**.
   The Create User page opens.
4. Enter the name (username) and password for the new site administrator.
5. Select **Administrator** in the **Roles** field for the user.
6. Select the one site to which they are granted access in the **Sites** field.
7. Click **Create user**.

Migrating Operators from an Existing VoiceConsole Database

If implementing a new system, you may not need to perform the steps in this section. The steps below show how to migrate operator templates from an existing VoiceConsole On Prem deployment implementation.

1. To move operators from one site to another, click the **Operator Management** tab.
2. Under **Navigation**, click **Operators**.
3. On the View Operators page, select the operators that you want to move.

4. Under **Operator Actions**, select **Move Operators** > **Move/Add selected operators to a site**.
5. From the **Destination Site** drop-down list in the **Move/Add selected operators to site** window, select the newly created site.
6. Select Move the Operator to the selected site.
7. Click **OK**.
8. Confirm that the operators appear in the new site by switching the **Site Information** drop down list.

Importing a Task to the New Site

1. Click the **Device Management** tab.
2. Under **Task Actions**, select **Import Task**.
   The Select Task File page opens.
3. Select **Task File (*.vad, *.zip, *.tas)**.
4. Click **Browse** to navigate to and open the file containing the updated tasksite.txt file you created.
5. Click **Next**.
   The application analyzes the selected file to determine which files must be imported for the task to function properly.
   The Select Task Components page opens, and the appropriate files are displayed in the bottom section of that page.
6. Give the task a meaningful name.
7. Click **Next**.
   The Select Sites page opens.
8. Select the sites at which this task is to be available.

   > NOTE
   > VoiceConsole On Prem deployment does not prevent you from selecting a site that differs from the site names in the tasksite.txt file; make sure that the correct task and site combination is chosen in this process.

9. Click **Import Task**.

Creating a Task Package for the New Site

1. Under **Navigation**, click **Task Packages**.
2. Under **Task Package Actions**, select **Create new task package**.
   The Select Task page opens.
3. Create the task package as normal, by providing information in the fields on this page.
4. Click **Create Task Package**.

> **NOTE**
> Every task package requires that the advanced settings be specified for each new site. Honeywell recommends that these settings be saved in a separate text document and then pasted in the advanced settings box at the time of creating the new task package.

Creating a Device Profile for the New Site

1. Click the **Device Management** tab.
2. Under **Navigation**, click **Device Profiles**.
3. Under **Device Profile Actions**, select **Create new device profile**.
4. On the Select VoiceClient page, enter a meaningful name for the device profile in the **Profile Name** field.
5. Select the appropriate version of VoiceClient from the drop-down list, and click **Next**.
6. On the Select Configuration Source page, click **Next**.
7. On the Configure Profile page, enter the applicable settings for wireless security on the **Network Configuration** and **Advanced Settings** tabs.
8. Click **Finish**.

Creating Additional Sites in VoiceCheck for Multiple Site Implementations

> **NOTE**
> This section applies only to a VoiceConsole On Prem deployment.

In order to support multiple site implementations, several steps need to be taken within VoiceConsole On Prem deployment and within VoiceCheck. The VoiceCheck steps are documented below. See Creating Additional Sites in VoiceConsole On Prem Deployments for Multiple Site Implementations for the VoiceConsole On Prem deployment steps.

For multiple-site installations of VoiceCheck, you must create sites in addition to the singular default site.

Creating Sites

1. Log in as the global administrator of VoiceCheck, and select the **Administration** tab.
2. In the left navigation pane, click **Sites**.
3. Under **Site Actions**, click **Create a New Site**.
4. On the Create Site page, enter the new site name and site-specific information.
5. Click **Save**. The new site appears in the View Sites list.

Creating a Site-Specific User for the Site

Perform the following steps to create a site-specific administrator for the new site.

1. Under the **Administration** tab, click **Users**.
2. Click **Create New Login**.
3. Enter the new user name and password, and click **Save**.
4. On the Create User page, enter the Role, Sites, and Status information.
   - For **Role**, select **Administrator**.
   - For **Sites**, select the site that you just created.
   - For **Status**, select **Enabled**.
5. Click **Save** to complete the creation of the user.

> **TIP**
> For other users who have access to this site, you need to go back to the original site and edit the users so that they have access to view or use this new site.

APPENDIX F

VOICECONSOLE VERSION HISTORY

The following table lists the version history - including release date and build information - for all released versions of VoiceConsole.

VoiceConsole 6.x

Version	Release Date	Tomcat
6.6	Sep 2026	10.1.55 †
6.5.2	Aug 2026	10.1.55 †
6.5.1	Aug 2026	10.1.55 †
6.5	Jul 2026	10.1.55 †
6.4	Mar 2026	9.0.102 †
6.3.2	Mar 2026	9.0.102 †
6.3.1 Withdrawn	Jan 2026	
6.3 Withdrawn	Oct 2025	
6.2.1	Jan 2025	9.0.86 †
6.2 Withdrawn	Nov 2024	
6.1	Mar 2024	9.0.78 †

IMPORTANT
VoiceConsole 6.4 is a Controlled General Availability Release to enable broader customer use while adoption and feedback are monitored.

VoiceConsole 5.x

Version	Release Date	Tomcat
5.6.5	Sep 2025	9.0.102

Version	Release Date	Tomcat
5.6.4	Jun 2025	9.0.102
5.6.3	Oct 2023	9.0.78
5.6.2	Jun 2023	9.0.73
5.6.1	Oct 2022	9.0.60
5.6	Jul 2022	9.0.60
5.5	Oct 2021	9.0.50
5.4.1	Jan 2021	9.0.12
5.4	Jun 2020	9.0.12
5.3	Jan 2020	9.0.12
5.2.1	Jul 2019	9.0.12
5.2 SP1	Apr 2019	9.0.12
5.2	Mar 2019	9.0.12
5.1	Apr 2016	7.0.42
5.0	Jul 2013	7.0.35

VoiceConsole 4.x

Version	Release Date	Tomcat
4.2 Rev B	Jan 2013	7.0.23
4.2 Rev A	Nov 2012	7.0.23
4.1	Dec 2011	7.0.14
4.0.1	Feb 2011	6.0.14
4.0	Dec 2010	6.0.14

VoiceConsole 3.x

Version	Release Date	Tomcat
3.2	Sep 2010	6.0.14
3.1.1 Rev B	Nov 2009	6.0.14
3.1.1 Rev A	Nov 2009	6.0.14
3.1	Aug 2009	6.0.14
3.0.1 Rev B	Jul 2009	6.0.14

Version	Release Date	Tomcat
3.0.1 Rev A	May 2009	6.0.14
3.0 Rev B	Dec 2008	6.0.14
3.0 Rev A	Nov 2008	6.0.14

Honeywell
855 S Mint St.
Charlotte, NC 28202

automation.honeywell.com

VoiceConsole On Prem Deployment Implementation Guide

October 2026